transcell®



MODEL
FDI-02

Manual

Force Data Instrument

Version 2.1 April 24, 2025

© Transcell Technology, Inc. 2012-2025. All rights reserved.
The information contained herein is the property of Transcell Technology and is supplied without liability for errors or omissions. No part may be reproduced or used except as authorized by contract or other written permission. The copyright and the foregoing restriction on reproduction and use extend to all media in which the information may be embodied.

Contents subject to change without notice.

Contents

DISPLAY & KEYPAD DETAILS 3
INSTALLATION & OVERVIEW 5
INSTALLATION 5
INSTRUMENT CONFIGURATION 7
CONFIGURATION MENUS 7
ENTERING THE FUNCTIONS (“NN”) CONFIGURATION MENU 7
FUNCTIONS (“NN”) MENU DESCRIPTIONS 8
ENTERING THE SYSTEM (“S”) CONFIGURATION MENU 9
SYSTEM (“S”) MENU DESCRIPTIONS 9
ENTERING THE CALIBRATION (“CAL”) CONFIGURATION MENU 10
CALIBRATION (“CAL”) MENU DESCRIPTIONS 11
ENTERING THE COMMUNICATION (“CONN”) CONFIGURATION MENU 12
COMMUNICATION (“CONN”) MENU DESCRIPTIONS 12
INSTRUMENT CALIBRATION 14
CALIBRATION OVERVIEW 14
LIVE CALIBRATION OVERVIEW 14
LIVE POSITIVE SPAN CALIBRATION INSTRUCTIONS (CAL7) 15
LIVE NEGATIVE SPAN CALIBRATION INSTRUCTIONS (CAL8) 15
LIVE ZERO CALIBRATION INSTRUCTIONS (CAL6) 16
MANUAL CALIBRATION ADJUSTMENT INSTRUCTIONS (CAL9) 16
KEY-IN (MV/V) POSITIVE CALIBRATION INSTRUCTIONS (CAL10) 17
KEY-IN (MV/V) NEGATIVE CALIBRATION INSTRUCTIONS (CAL11) 18
REFERENCE (MV/V) CALIBRATION (CAL12) 18
VIEW CALIBRATION MODE INSTRUCTIONS (CAL13) 19
ADVANCED OPERATION 21
PEAK HOLD MODE 21
SERIAL PORT INFORMATION 22
SERIAL PORT MODES 22
OUTPUT STRINGS 23
SPECIFICATIONS 24
ERROR MESSAGES 24
TROUBLESHOOTING 25

DISPLAY & KEYPAD DETAILS

This instrument uses a 6-digit LCD (Liquid Crystal Display) with adjustable LED backlight. The Table below summarizes the display annunciators.



Symbol	Display Indication
→0←	Displays when the instrument reading is at Zero.
P	The instrument is in Peak Hold mode.
lb	The displayed force reading is in pounds (lbf).
kg	The displayed force reading is in kilograms (kgf).
g	The displayed force reading is in grams (gf).
oz	The displayed force reading is in ounces (ozf).
	The displayed force reading is in Newtons (N).
N	The displayed reading is negative (minus).
◣◢	Displays whenever the instrument reading is at rest, i.e., not in motion.
▭	When blinking, the batteries need to be replaced soon.

The backlight behavior is defined by the S4 menu. If S4 = AUto0, then:

1. If no keys are pressed within 60 seconds, the backlight will switch off to save battery life.
2. You can wake up the backlight by pressing any key.

The keypad comprises five (5) function keys.



Marking	Keypad Function
Units	Selects the displayed unit of measure, e.g., lbf, kgf and N.
Peak	Selects the peak hold display mode of the instrument, e.g., live data, positive peak and negative peak. (This function must first be enabled using the nn36 parameter)
Zero	Zeroes the force display reading.
Data	Sends the displayed data to the serial communication port.
On/Off	Press and hold for a few seconds to turn the instrument ON. **Press and hold for about five seconds to shut the instrument OFF.**

Note: This unit automatically zeroes when powered ON, regardless of the applied load, its polarity, or its stability.

Press and Hold keypad functions:

You will hear a double beep for all press and hold functions, except:

- the initial turn on event (no beep) and
- entering the Configuration Menu (one beep).

Automatic Power Off:

By default, the unit will automatically power off if no keys are pressed and there is no measured force change within a thirty (30) minute period. During the last five seconds, the display will count down by adding underscores ("_"). The instrument displays 'oFF' and then automatically powers off.

INSTALLATION & OVERVIEW

Remember that the installer is ultimately responsible to assure that a particular installation will be and remain safe and operable under the specific conditions encountered.

The instrument must be properly configured and calibrated prior to use.

Installation

Find a suitable location for the instrument and use the included bracket to mount the unit to a wall or table. Use this handy guide for mounting the bracket to a wall or table:

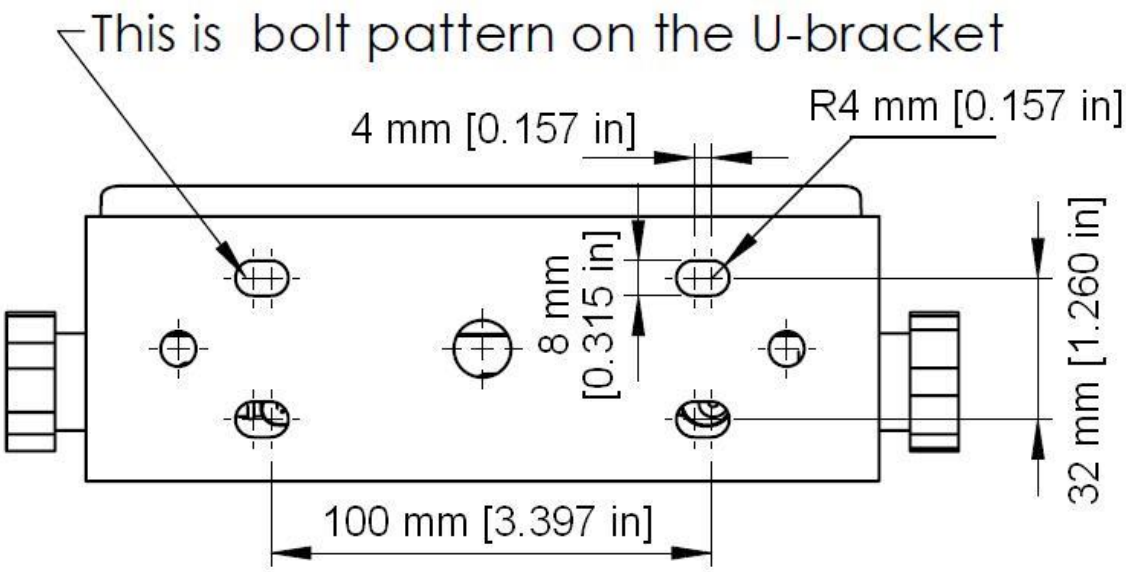

The INSTRUMENT ships with a force sensor cable which plugs into the appropriate connector. Use the following color codes to connect the force sensor.

Force Sensor Cable Leads

Color	Function		Color	Function
Black	- Excitation		White	- Signal
Red	+ Excitation		Green	+ Signal

The INSTRUMENT features one full duplex RS-232 serial port, designed for connection to a computer or a serial printer. The same port may be also used as a simplex, RS-232 port designed for connection to a remote display.

DSUB9 Connector

Pin No.	Wire Name
2	RXD
3	TXD
5	Ground

The INSTRUMENT requires 4-AA batteries to operate (not included). To install the batteries, remove the plastic battery cover from the rear panel. Observe proper direction (polarity) of the batteries. Replace the battery cover.

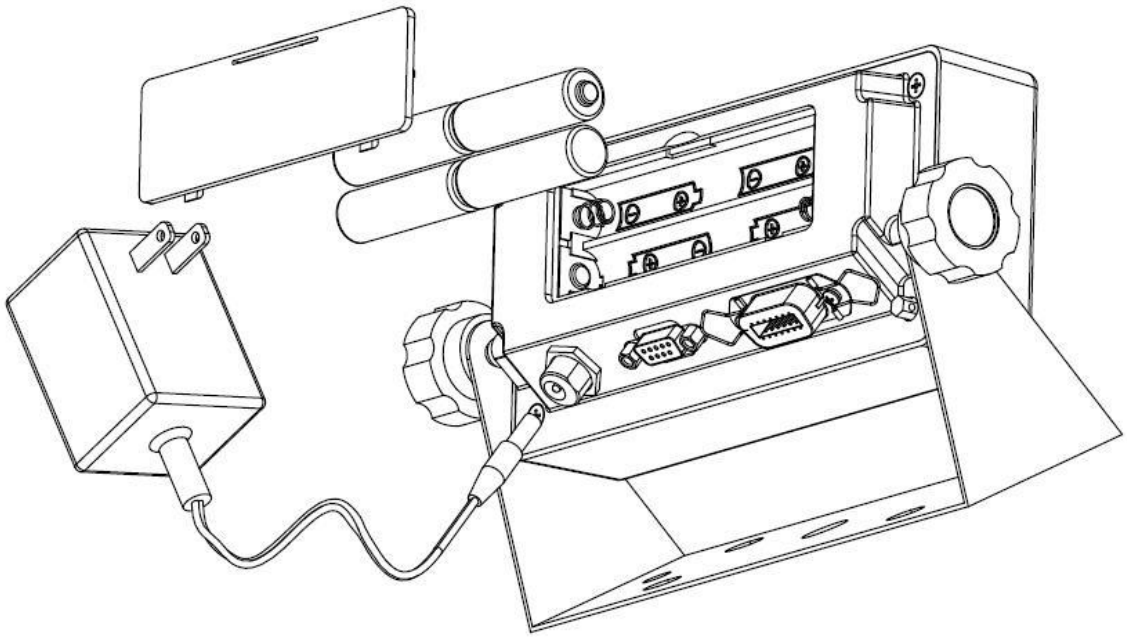

The INSTRUMENT may also be powered by the included AC wall adaptor.

Your instrument is now ready for configuration and calibration.

INSTRUMENT CONFIGURATION

Configuration Menus

The FDI-02 contains four (4) menus to configure the instrument:

Functions ("nn") Menu **–** Configures all measurement related parameters.

System ("-S-") Menu **–** Configures all system related parameters.

Calibration ("CAL") Menu **–** Contains the calibration procedures.

Communications ("Conn") Menu **–** Configures the COM1 and COM2 communication parameters.

The configuration menus are laid out in the following vertical arrangement:

- Top [Menu selection] level
- Parameter level
- Selection level (or function level, e.g., span calibration)

Please review the following chart to get a feel for how to navigate among the various menus and parameters.

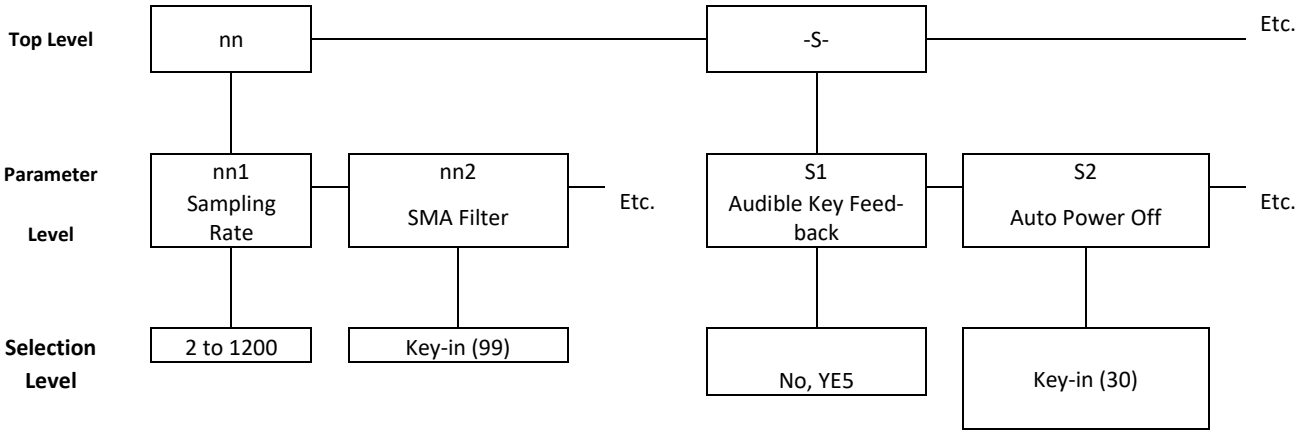

Entering the Functions ("nn") Configuration Menu

1. Switch off the instrument by pressing and holding down the ON/OFF key for about 5 seconds.
2. Press and hold down the ON/OFF key (about 20 seconds) until the screen shows "nn".
3. Scroll down using the PEAK (down) key to reach the parameter level. The instrument shows "nn 1".
4. Move from one "nn" menu parameter to the next by using the DATA (left) or ON/OFF (right) keys. For example, to go from nn1 to nn2, press the ON/OFF key. To go from nn2 back to nn1, press the DATA key.

5. Once you have arrived at the proper “nn” menu parameter, e.g.,” nn 1”, press the PEAK (down) key once to arrive at the selection level. The instrument displays the current parameter setting.
6. If there is a selection list, scroll through the available parameter settings, use the DATA (left) or ON//OFF (right) keys. Otherwise, use the arrow keys to adjust the displayed value to the new value.
7. Once the setting you want is displayed on the screen, press the ZERO (set) key to save this value and revert up to the parameter level, e.g.,” nn 1”.

To save all parameter settings, it is imperative to exit all menus in the following manner: At the parameter level, press the UNITS (up) key twice (two times) to exit the Functions Menu. The instrument displays ‘SAvE’ and then automatically powers off.

Functions (“nn”) Menu Descriptions

This section provides more detailed descriptions of the selections found in the Functions Menu Chart. Factory-set defaults are shown in **bold** with a checkmark; **(√)**.

CODE/NAME	DESCRIPTION	SELECTION LIST
nn1 Sampling Rate	Sets the sampling rate in Hertz (measurements per second).	100 80 60 50 40 30 **20** √ 15 10 5 2 1200 600 400 300 240 200 150 120
nn2 SMA Filter	Sets the number of measurements to be averaged to affect the speed and stability of the readings. A lower number provides a faster response. Choose the value that works best for your application.	Key-in 1 – 99 **01** √
nn3 Application	Sets one special application. “0” = None (Gross/Net), “2” = Remote Display, “5” = Peak Hold, “	0 2 **5** √
nn4 Default Peak Hold Mode	Sets the peak hold mode to be activated when the instrument is first switched on. “rEAL” = Live, “hoLd P” = Positive Peak, “hoLd U” = Valley Peak	**rEAL** √ hoLd P hoLd U
nn5 Power On Zero	Sets the power on zero mode. “no” = no power on zero, “yE5” = power on zero	no **yE5** √
nn6 Factory Reset	This sub-menu will reset all parameters in the “nn”, “-S-” and “Conn menus to the default settings. It will not overwrite any previously saved calibration data. USE WITH CAUTION!	Press the **PEAK** key twice to execute

CODE/NAME	DESCRIPTION	SELECTION LIST
nn7 Full Factory Reset	This sub-menu will reset all instrument parameters to the default settings. It will also overwrite any previously saved calibration data. USE WITH EXTREME CAUTION!	Press the **PEAK** key twice to execute
nn8 Show Live Counts	Shows live AD Counts for Troubleshooting.	Press **PEAK** key to begin sequence

Entering the System ("S") Configuration Menu

1. Switch off the instrument by pressing and holding down the ON/OFF key for about 5 seconds.
2. Press and hold down the ON/OFF key (about 20 seconds) until the screen shows "nn".
3. Press the ON/OFF (right) key once. The screen displays "-S-".
4. Scroll down using the PEAK (down) key to reach the parameter level. The instrument shows "S 1".
5. Move from one "S" parameter to the next by using the DATA (left) or ON/OFF (right) keys. For example, to go from S1 to S2, press the ON/OFF key. To go from S2 back to S1, press the DATA key.
6. Once you have arrived at the proper "S" menu parameter, e.g. "S 1", press the PEAK (down) key once to arrive at the selection level. The instrument displays the current parameter setting.
7. If there is a selection list, scroll thru the available parameter settings, use the DATA (left) or ON/OFF (right) keys. Otherwise, use the arrow keys to adjust the displayed value to the new value.
8. Once the setting you want is displayed on the screen, press the ZERO (set) key to save this value and revert up to the parameter level, e.g. "S 1".
9. To save all parameter settings, it is imperative to exit all menus in the following manner: At the parameter level, press the UNITS (up) key twice (two times) to exit the System Menu. The instrument displays 'SAvE' and then automatically powers off.

System ("S") Menu Descriptions

This section provides more detailed descriptions of the selections found in the System Menu Chart. Factory-set defaults are shown in **bold** with a checkmark; **(√)**.

CODE/NAME	DESCRIPTION	SELECTION LIST
S1 Audible Key Feedback	Selects the function of the audible key feedback (beeper). "no" = Disabled "YES" = Enabled	no **YES √**

CODE/NAME	DESCRIPTION	SELECTION LIST
S2 Auto Power Off	Selects the automatic power off time, expressed in minutes of inactivity (keys and force measurement change). Pressing the **PEAK** key to scroll down one level begins the sequence.	Key-in 0 to 30 **30** √
S3 Low Battery Auto Power Off	Selects the automatic power off time of the instrument after it enters a low battery condition. Expressed in minutes. Pressing the **PEAK** key to scroll down one level begins the sequence.	Key-in 0 to 99 **02** √
S4 Backlight Behavior	Selects the behavior of the LCD backlight. "AUto0" = Auto-Off "nnotn" = Motion Detect On "on" = Always On	**AUto0** √ nnotn on
S5 Backlight Brightness	Selects the brightness of the LCD backlight. Selections are in % of full brightness. Intended to help save battery life.	0 (OFF) 20 50 75 **100** √
S6 Calibration Password	Sets the password for instrument calibration. Pressing the **PEAK** key to scroll down one level begins the sequence. "000000" = No Password	Key-in 000000 to 999999 **000000** √

Entering the Calibration ("CAL") Configuration Menu

1. Switch off the instrument by pressing and holding down the ON/OFF key for about 5 seconds.
2. Press and hold down the ON/OFF key (about 20 seconds) until the screen shows "nn".
3. Press the ON/OFF (right) key two times. The screen displays "CAL".
4. Scroll down using the PEAK (down) key to reach the parameter level. The instrument shows "CAL 1".
5. Move from one "CAL" parameter to the next by using the DATA (left) or ON/OFF (right) keys. For example, to go from CAL1 to CAL2, press the ON/OFF key. To go from CAL2 back to CAL1, press the DATA key.
6. Once you have arrived at the proper "CAL" menu parameter, e.g., "CAL 1", press the PEAK (down) key once to arrive at the selection level. The instrument displays the current parameter setting.
7. If there is a selection list, scroll through the available parameter settings, use the DATA (left) or ON/OFF (right) keys. Otherwise, use the arrow keys to adjust the displayed value to the new value.
8. Once the setting you want is displayed on the screen, press the ZERO (set) key to save this value and revert up to the parameter level, e.g., "CAL 1".
9. To save all parameter settings, it is imperative to exit all menus in the following manner: At the parameter level, press the UNITS (up) key twice (two times) to exit the Calibration Menu. The instrument displays 'SAvE' and then automatically powers off.

Calibration ("CAL") Menu Descriptions

This section provides more detailed descriptions of the selections found in the Calibration Menu Chart. Factory-set defaults are shown in **bold** with a checkmark; **(√)**.

CODE/NAME	DESCRIPTION	SELECTION LIST
CAL1 Calibration Unit	Sets the force unit of measure to be used in the calibration process. "1" = unit is lbf "2" = unit is kgf "3" = unit is ozf "4" = unit is gf "5" = unit is N (newtons) "6" = unit is kN (kilonewton "7" = unit is kip (kilopound)	**1** √ 2 3 4 5 6 7
CAL2 Decimal Pt.	Sets the decimal point value. Use together with CAL3.	**0** √ 0.0 0.00 0.000 0.0000 0.00000 00
CAL3 Display Divisions	Sets the interval value. Use together with CAL2.	**1**√ 2 5
CAL4 Calibration Mode	Sets the instrument calibration mode. "no" = Live, "yE5" = Key-In (mV/V)	**no** √ yE5
CAL5 Quick Cal	Sets the calibration stability level. Enable for hydraulic sensor calibration. "no" = Standard calibration "YES" = Quick calibration	**no** √ yE5
CAL6 Zero Calibration	Places instrument into live zero-calibration mode.	Press **PEAK** key to begin sequence
CAL7 Live Positive Span	Places instrument into live positive (+) span calibration mode.	Press **PEAK** key to begin sequence
CAL8 Live Negative Span	Places instrument into live negative (-) span calibration mode.	Press **PEAK** key to begin sequence
CAL9 Manual Calibration Adjustment	Places instrument into manual calibration adjustment mode.	Press **PEAK** key to begin sequence
CAL10 Key-in Positive Span	Places instrument into key-in (mV/V) positive span calibration mode.	Press **PEAK** key to begin sequence
CAL11 Key-in Negative Span	Places instrument into key-in (mV/V) negative span calibration mode.	Press **PEAK** key to begin sequence

CODE/NAME	DESCRIPTION	SELECTION LIST
CAL12 Reference Calibration	Places instrument into reference (mV/V) calibration mode. Factory Use Only. Password protected.	Press **PEAK** key to begin sequence
CAL13 View Calibration	Places instrument into view calibration mode.	Press **PEAK** key to begin sequence

Entering the Communication ("Conn") Configuration Menu

1. Switch off the instrument by pressing and holding down the ON/OFF key for about 5 seconds.
2. Press and hold down the ON/OFF key (about 20 seconds) until the screen shows "nn".
3. Press the DATA (left) key once. The screen displays "Conn".
4. Scroll down using the PEAK (down) key to reach the parameter level. The instrument shows "Con 1".
5. Move from one "Conn" parameter to the next by using the DATA (left) or ON/OFF (right) keys. For example, to go from Con1 to Con2, press the ON/OFF key. To go from Con2 back to Con1, press the DATA key.
6. Once you have arrived at the proper "Conn" menu parameter, e.g., "Con 1", press the PEAK (down) key once to arrive at the selection level. The instrument displays the current parameter setting.
7. If there is a selection list, scroll through the available parameter settings, use the DATA (left) or ON/OFF (right) keys. Otherwise, use the arrow keys to adjust the displayed value to the new value.
8. Once the setting you want is displayed on the screen, press the ZERO (set) key to save this value and revert up to the parameter level, e.g., "Con 1".
9. To save all parameter settings, it is imperative to exit all menus in the following manner: At the parameter level, press the UNITS (up) key twice (two times) to exit the Communication Menu. The instrument displays 'SAvE' and then automatically powers off.

Communication ("Conn") Menu Descriptions

This section provides more detailed descriptions of the selections found in the Communication Menu Chart. Factory-set defaults are shown in **bold** with a checkmark; **(√)**.

CODE/NAME	DESCRIPTION	SELECTION LIST
Con1 Baud Rate	Selects the baud rate for data transmission through the COM1 serial port.	600, 1200, 2400, 4800, **9600 √**, 19200, 38400, 57600, 115200, 230400, 460800

CODE/NAME	DESCRIPTION	SELECTION LIST
Con2 Data Bits, Parity and Stop Bits	Selects the number of data bits and parity for the COM1 serial port. "8_n_1" = 8 data bits with no parity bit and one stop bit "8_n_2" = 8 data bits with no parity bit and two stop bits "7_n_1" = 7 data bits with no parity bit and one stop bit "7_n_2" = 7 data bits with no parity bit and two stop bits "7_E_1" = 7 data bits with even parity bit and one stop bit "7_E_2" = 7 data bits with even parity bit and two stop bits "7_o_1" = 7 data bits with odd parity bit and one stop bit "7_o_2" = 7 data bits with odd parity bit and two stop bits	**8_n_1** √ 8_n_2 7_n_1 7_n_2 7_E_1 7_E_2 7_o_1 7_o_2
Con3 Serial Port Mode	Selects the mode of the COM1 serial port: Refer to Serial Port Information for more details. "0" = Demand Full Duplex "1" = Continuous Full Duplex “2” = Auto Print	**0** √ 1 2
Con4 Output String	Selects fixed output string for the COM1 serial port. Refer to Serial Port Information for more details. "0" = String Format 1 (Condec Demand) "1" = String Format 2 (Condec Continuous) "2" = Text Print Ticket “3” = Text Print Ticket with MP-20 Auto Label Feed	**0** √ 1 2 3
Con5 ID Number	Selects ID Number for serial port. **Factory Use Only**. Password protected.	Press **PEAK** key to begin sequence
Con6 Baud Rate	Selects the baud rate for data transmission through the COM2 serial port.	600, 1200, 2400, 4800, **9600** √, 19200, 38400, 57600, 115200, 230400, 460800
Con7 Data Bits, Parity and Stop Bits	Selects the number of data bits and parity for the COM2 serial port. "8_n_1" = 8 data bits with no parity bit and one stop bit "8_n_2" = 8 data bits with no parity bit and two stop bits "7_n_1" = 7 data bits with no parity bit and one stop bit "7_n_2" = 7 data bits with no parity bit and two stop bits "7_E_1" = 7 data bits with even parity bit and one stop bit "7_E_2" = 7 data bits with even parity bit and two stop bits "7_o_1" = 7 data bits with odd parity bit and one stop bit "7_o_2" = 7 data bits with odd parity bit and two stop bits	**8_n_1** √ 8_n_2 7_n_1 7_n_2 7_E_1 7_E_2 7_o_1 7_o_2
Con8 Serial Port Mode	Selects the mode of the COM2 serial port: Refer to Serial Port Information for more details. "0" = Demand Full Duplex "1" = Continuous Full Duplex “2” = Auto Print	**0** √ 1 2
Con9 Output String	Selects fixed output string for COM2 serial port. Refer to Serial Port Information for more details. "0" = String Format 1 (Condec Demand) "1" = String Format 2 (Condec Continuous) "2" = Text Print Ticket “3” = Text Print Ticket with MP-20 Auto Label Feed	0 1 **2** √ 3

INSTRUMENT CALIBRATION

Calibration Overview

There are two ways to calibrate the instrument:

1. **Live calibration**: You will be calibrating an actual load sensor to the instrument using live test loads. You can have up to seven positive calibration points and up to seven negative calibration points. These calibration points are denoted as C1 through C7.
2. **mV/V calibration:** You will be calibrating the instrument using a load cell simulator (calibrator). Previously established mV/V input signal values - and the corresponding force values - are required. You can have up to six positive calibration points and up to six negative calibration points. These calibration points are denoted as C1 through C6.

The absolute value of each subsequent calibration point should be higher than the last, e.g., the C2 value should be greater than the C1 value, etc.

Live Calibration Overview

Live calibration comprises two main steps: **zero** (CAL6) and **span** (CAL7). A third calibration menu for **negative span** (CAL8) is also available for systems operating in both tension and compression.

What follows is the recommended live calibration sequence. **Any deviations from this may cause unwanted behavior**:

1. Place the force sensor onto your test fixture, with no other forces applied.
2. Navigate to CAL7 and perform the positive span calibration for up to seven span calibration points.
3. Optional: repeat steps 1-2 for negative span calibration (CAL8)
4. Mount the force sensor onto its final fixture.
5. Navigate to CAL6 and perform the zero calibration.

Notes:

1. You may see dashes appear temporarily on the screen during live calibration. This simply means that the instrument is processing data.
2. To disable the positive calibration slope, simply enter a zero value (e.g., “0.0”) for C1 while in CAL7.
3. To disable the negative calibration slope, simply enter a zero value (e.g., “0.0”) for C1 while in CAL8.

Live Positive Span Calibration Instructions (CAL7)

1. While in the Calibration menu, scroll to "**CAL 7**", and then scroll down once using the PEAK (down) key. The indicator will display '**Fit**'.
2. Assure a no-load condition and then press the ZERO (set) key to save the value. After a brief period, the instrument will then prompt you to enter the data for the first calibration point (C1). The previously saved force value will be displayed with one digit blinking.
3. Apply the first test load to the force sensor.
4. Use the four directional keys to enter in the actual positive force value, e.g., 1000.0 lbf. Increase the flashing digit by pressing the UNITS key. Decrease the flashing digit by pressing the PEAK key. Pressing the DATA key or the ON/OFF key will change the position of the flashing digit.
5. Press the ZERO (set) key to save the value. The indicator briefly displays **'End C1'** and then moves to the next calibration point (C2).
6. Repeat steps 3 through 5 to enter data for the remainder of the calibration points. **You need not enter data for all seven calibration points. To cease entering additional calibration points, simply enter zero for the new value, e.g., 0.0 lbf.**
7. At the conclusion of C7 (or the last calibration point), the instrument will show "-donE" and reverts to "CAL 7".

If the calibration was *not* successful, one of the following error messages will appear.

- "**Err0**" - The calibration test load or the keyed-in load is larger than the full capacity of the instrument. Change the calibration test load or check the input data.
- "**Err1**" - The calibration test load or the keyed-in load is smaller than 1% of the full capacity of the instrument. Change the calibration test load or check the input data.
- "**Err2**" – There is not enough signal from the force sensor to complete the calibration process. Most common causes include incorrect force sensor wiring, mechanical obstruction or a faulty (damaged) force sensor.

Take the indicated action to correct the problem and then perform a new calibration.

To save all calibration settings, you must exit all menus in the following manner: At the parameter level, press the UNITS (up) key twice (two times) to exit the Calibration Menu. The instrument displays 'SAvE' and then automatically powers off.

Live Negative Span Calibration Instructions (CAL8)

For negative calibration data, you will not see a minus sign on the screen. You need not be concerned as all data entered is presumed to be a negative value, e.g., 1000.0 lbf is really -1000.0 lbf.

1. While in the Calibration menu, scroll to "**CAL 8**", and then scroll down once using the PEAK (down) key. The indicator will display '**Fit**'.
2. Assure a no-load condition and then press the ZERO (set) key to save the value. After a brief period, the instrument will then prompt you to enter the data for the first calibration point (C1). The previously saved force value will be displayed with one digit blinking.

3. Apply the first test load to the force sensor.
4. Use the four directional keys to the actual positive force value, e.g., 1000.0 lbf. Increase the flashing digit by pressing the UNITS key. Decrease the flashing digit by pressing the PEAK key. Pressing the DATA key or the ON/OFF key will change the position of the flashing digit.
5. Press the ZERO (set) key to save the value. The indicator briefly displays 'End C1' and then moves to the next **negative** calibration point (C2).
6. Repeat steps 3 through 5 to enter data for the remainder of the calibration points. **You need not enter data for all seven calibration points. To cease entering additional calibration points, simply enter zero for the new value, e.g., 0.0 lbf.**
7. At the conclusion of C7 (or the last calibration point), the instrument will show "-donE" and reverts to "CAL 8".

To save all calibration settings, you must exit all menus in the following manner: At the parameter level, press the UNITS (up) key twice (two times) to exit the Calibration Menu. The instrument displays 'SAvE' and then automatically powers off.

Live Zero Calibration Instructions (CAL6)

1. While in the Calibration menu, scroll to **CAL 6**", and then scroll down once using the PEAK (down) key. The display will momentarily show "**C 0**" followed by a value. This value is the internal A/D count and can prove useful when trying to troubleshoot setup problems. If you see an 'N' on the screen, this indicates that the displayed value is negative (minus).
2. Mount the force sensor onto its final fixture, assure a no-load condition and then press the PEAK key to save the zero-point value. The display will show "**SET**" and "**EndC0**" momentarily and then revert up to CAL6.

To save all calibration settings, you must exit all menus in the following manner: At the parameter level, press the UNITS (up) key twice (two times) to exit the Calibration Menu. The instrument displays 'SAvE' and then automatically powers off.

Underneath the display you may find down arrows which have been activated. For each down arrow displayed, add 1 million to the displayed count. (Max value is 4.8 million counts)

Manual Calibration Adjustment Instructions (CAL9)

Use this menu to "tweak" the stored force values (C1 to C7) used during live calibration to dial in more accurate readings. Please note that Ptx = Cx, e.g., Pt1 = C1, Pt2 = C2, etc.

1. While in the Calibration menu, scroll to **CAL 9**", and then scroll down once using the PEAK (down) key. The display will momentarily show "**POS AJ**" and "**Pt1**", followed by a value with a flashing digit. This value is the currently stored force value corresponding to the first **positive** span calibration point, C1.
2. Use the four directional keys to adjust the force value. Increase the flashing digit by pressing the UNITS key. Decrease the flashing digit by pressing the PEAK key. Pressing the DATA key or the ON/OFF key will change the position of the flashing digit.

3. Press the ZERO (set) key to save the value. The indicator briefly displays **'Pt2'** and then moves to the next calibration point (C2).
4. Repeat steps 2 and 3 to enter data for the remainder of the **positive** calibration points.
5. At the conclusion of C7, the instrument will show "**NEG AJ**" and "**Pt1**", followed by a value with a flashing digit. This value is the currently stored force value corresponding to the first **negative** span calibration point, C1.
6. Use the four directional keys to adjust the force value. Increase the flashing digit by pressing the UNITS key. Decrease the flashing digit by pressing the PEAK key. Pressing the DATA key or the ON/OFF key will change the position of the flashing digit.
7. Press the ZERO (set) key to save the value. The indicator briefly displays **'Pt2'** and then moves to the next calibration point (C2).
8. Repeat steps 6 and 7 to enter data for the remainder of the **negative** calibration points.
9. At the conclusion of C7, the instrument will revert to "CAL 9".

Key-in (mV/V) Positive Calibration Instructions (CAL10)

You will be entering data for up to six **positive** calibration points. These calibration points are denoted as C1 through C6. The absolute value of each subsequent calibration point should be higher than the last.

Each calibration point requires entry of two values:

- A force value, e.g., 200 lbf
- A corresponding mV/V input signal value, e.g., 1.0125 mV/V.

1. While in the Calibration menu, scroll to "**CAL 10**", and then scroll down once using the PEAK (down) key. The indicator will briefly display 'Pos C' and then prompt you to enter the data for the first **positive** calibration point (C1). The previously saved force value will be displayed with one digit blinking.
2. Use the four directional keys to enter in the actual positive force value, e.g., 200 lbf.
3. Press the ZERO (Set) key to save the force value. The indicator will prompt you to enter the corresponding mV/V input signal. The previously saved mV/V value will be displayed with one digit blinking.
4. Use the four directional keys to enter in the actual mV/V value.
5. Press the ZERO (Set) key to save the mV/V value. The indicator briefly displays 'End C1' and then moves to the next **positive** calibration point (C2).
6. Repeat steps 2 through 5 to enter data for the remainder of the **positive** calibration points. **You need not enter data for all six positive calibration points. To cease entering additional calibration points, simply enter zero for both values, e.g., 0 lbf and 0.0000 mV/V.**
7. When all values are entered successfully, the display will show "**End Cx**" momentarily before reverting to CAL10.

To save all calibration settings, you must exit all menus in the following manner: At the parameter level, press the UNITS (up) key twice (two times) to exit the Calibration Menu. The instrument displays 'SAvE' and then automatically powers off.

Key-in (mV/V) Negative Calibration Instructions (CAL11)

You will be entering data for up to six **negative** calibration points. These calibration points are denoted as C1 through C6. The absolute value of each subsequent calibration point should be higher than the last.

Each calibration point requires entry of two values:

- A force value, e.g., 200 lbf
- A corresponding mV/V input signal value, e.g., 1.0125 mV/V.

1. While in the Calibration menu, scroll to " **CAL 11**", and then scroll down once using the PEAK (down) key. The indicator will briefly display 'Neg C' and then prompt you to enter the data for the first **negative** calibration point (C1). The previously saved force value will be displayed with one digit blinking.
2. Use the four directional keys to enter in the actual negative force value, e.g., 200 lbf. **For negative calibration data, you will not see a minus sign on the screen. You need not be concerned as all data entered is presumed to be a negative value, e.g., 200 lbf is really -200 lbf.**
3. Press the ZERO (Set) key to save the force value. The indicator will prompt you to enter the corresponding mV/V input signal. The previously saved mV/V value will be displayed with one digit blinking.
4. Use the four directional keys to enter in the actual negative mV/V value. **For negative calibration data, you will not see a minus sign on the screen. You need not be concerned as all data entered is presumed to be a negative value, e.g., 1.0125 mV/V is really -1.0125 mV/V.**
5. Press the ZERO (Set) key to save the value. The indicator briefly displays 'End C1' and then moves to the next **negative** calibration point (C2).
6. Repeat steps 2 through 5 to enter data for the remainder of the **negative** calibration points. **You need not enter data for all six negative calibration points. To cease entering additional calibration points, simply enter zero for both values, e.g., 0 lbf and 0.0000 mV/V.**
7. When all values are entered successfully, the display will show "**End Cx**" momentarily before reverting to CAL11.

To save all calibration settings, you must exit all menus in the following manner: At the parameter level, press the UNITS (up) key twice (two times) to exit the Calibration Menu. The instrument displays 'SAvE' and then automatically powers off.

Reference (mV/V) Calibration (CAL12)

You will be calibrating the force data instrument to a connected load cell simulator using two calibration points:

- Zero: 0.0 mV/V
- Span: A positive mV/V input signal value of your choice, e.g., 4.0000 mV/V.
  Note: maximum value is 4.5000 mV/V

This must be completed prior to using mV/V calibration mode.

1. While in the Calibration menu, scroll to "**CAL 12**", and then scroll down once using the PEAK (down) key.
2. The indicator will briefly display 'CA-rf2' followed by live A/D count data.
3. Set the connected load cell simulator to 0.0 mV/V.
4. Press the ZERO (Set) key. The indicator displays dashes and 'EndCF0' before moving on to the span calibration point by briefly displaying 'CA-rfP' followed by a value (0.00000) with one digit blinking.
5. Use the four directional keys to enter in the actual span mV/V input signal value of your choice, e.g., 4.0000 mV/V. Now set the connected load cell simulator to this mV/V setting.
6. Press the ZERO (Set) key. The indicator now displays live A/D count data.
7. Press the ZERO (Set) key again. The indicator displays dashes and 'EndCF1' before reverting to CAL12.

View Calibration Mode Instructions (CAL13)

This function allows viewing of stored calibration values and is used primarily for debugging purposes.

There are seven (7) sub-menus:

- **UCAL07**: Live Cal Positive Span, C1 to C7
- **UCAL08**: Live Cal Negative Span, C1 to C7
- **UCAL10**: Key-in Cal (mV/V) Positive Span, C1 to C7
- **UCAL11**: Key-in Cal (mV/V) Negative Span, C1 to C7
- **UCAL12**: Reference Cal (mV/V)
- **CALdt**: Internal Calibration Data (+/-), C1 to C7
- **Point**: No. of calibration points (Cx)

1. While in the Calibration menu, scroll to **CAL 13**", and then scroll down once using the PEAK (down) key. The display will briefly show "**C 0**" followed by the stored A/D count value for the fixture (Fit) or zero calibration (CAL6) and then "UCAL07".
2. Use the left or right directional keys to select the appropriate Sub-menu and then scroll down once using the PEAK (down) key.

   For **UCAL07 and UCAL08,** the instrument displays the following in sequence.
   Pt1: stored force value for C1, e.g., 500.0 lb
   PC1: stored A/D count for C1, e.g., 712586[1]

   For **CALdt**, the instrument displays the following in sequence.
   Pt1: stored force value for C1, e.g., 500.0 lb
   PC1: stored A/D count for C1, e.g., 712586[1]

   Note: "N" will be displayed for negative span

   For **UCAL10** and **UCAL11**, the instrument displays the following in sequence.
   Pt1: stored force value for C1, e.g., 500.0 lb
   PC1: stored mV/V value for C1, e.g., 2.0000

[1] Underneath the display you may find down arrows which have been activated. For each down arrow displayed, add 1 million to the displayed count. (Max value is 4.8 million counts).

To continue displaying the rest of the calibration information - Ptx and PCx, e.g., Pt2 and PC2 for C2, etc. - keep pressing the PEAK (down) key until you reach the end of the list and then press the PEAK (down) key once more to arrive back at the top of the sub-menu, i.e., UCAL10.

For **UCAL12**, the instrument displays the following in sequence and then automatically reverts to the sub-menu level.
rF nnu: stored mV/V value, e.g., 1.6000
rF cnt: stored A/D count, e.g., 712586[1]

For **Point**, the instrument displays the number of calibration points for positive span and negative span and then automatically reverts to the sub-menu level.

3. Press the UNITS (up) key to return to the CAL13 level menu.

ADVANCED OPERATION

Peak Hold Mode

This mode is used to capture peak forces measured during a specific process. These peak force values are held (frozen) on the screen. A common application is determining the breaking point of a part or assembly. The instrument captures both positive and negative peak forces. Peak forces are not retained when the instrument is powered OFF.

This mode of operation is enabled at the Factory [the nn30 parameter = “5”]. Use the nn36 parameter setting to select the default (power on) peak hold mode.

1. Push the PEAK key to activate the peak mode you want to use (repeat as needed):
   - “hoLd P” = Positive Peak; the “P” annunciator is ON.
   - “hoLd U” = Negative (Valley) Peak; the “P” annunciator is ON
   - “LiVE” = Live Measurement (peak forces not captured); the “P” annunciator is OFF
2. Apply force to the item under test. The measured peak force is displayed on the screen.
3. To reset all peak values to zero, press and hold the PEAK key for about 3 seconds until the display shows “Clr P”. This can be done in any peak hold mode.

SERIAL PORT INFORMATION

SERIAL PORT MODES

DEMAND DUPLEX MODE

The Demand Duplex Mode provides a two-way serial transmission mode. In this mode, the output information is transmitted on demand; either by pressing the DATA key on the instrument's front panel or upon receiving a recognized command from a host device (i.e., computer).

NOTE: Ensure that your cabling has a crossover (null modem) and contains the proper handshaking lines.

CONTINUOUS DUPLEX MODE

The Continuous Duplex Mode provides a two-way serial transmission mode. In this mode, the output information is transmitted continuously making it a popular choice for remote displays and other remote devices requiring a constant data stream. The transmission automatically occurs at the end of each display update. The instrument will react upon receiving a recognized command from a host device.

RECOGNIZED HOST COMMANDS (applies to both demand and continuous duplex modes)

ASCII code (Hex)	Symbol	Action by the instrument
50 or 70	P or p	Transmit the displayed force data through the serial port.
5A or 7A	Z or z	Zero the instrument
43 or 63	C or c	Change the displayed unit of measure
46 or 66	F or f	Transmit the firmware version through the serial port.

AUTO PRINT MODE

The Auto Print Mode provides a one-time serial transmission once a non-zero, stable condition is achieved.

OUTPUT STRINGS

TEXT PRINT TICKET

The Text Print Ticket is designed specifically for a serial printer.

```
GROSS       1000.0  lb
```

STRING FORMAT 1 (Condec Demand String)

String Format 1 is designed for two-way communication.

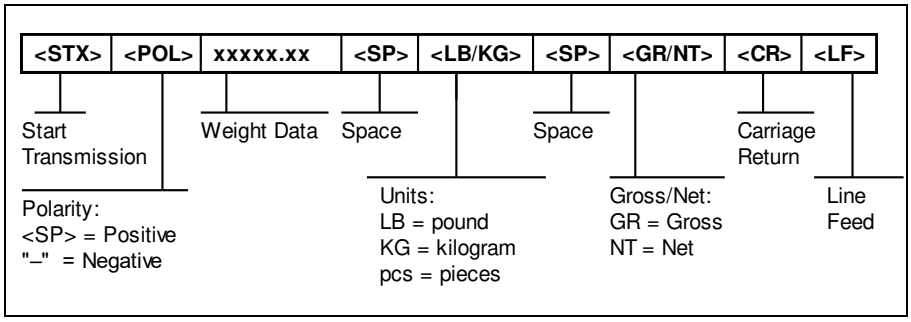

NOTE: Additional units are available:

NT = Newtons
oz = ounce
g<space> = grams
lb = pounds
kg = kilograms

STRING FORMAT 2 (Condec Continuous String)

String Format 1 is designed for one-way communication.

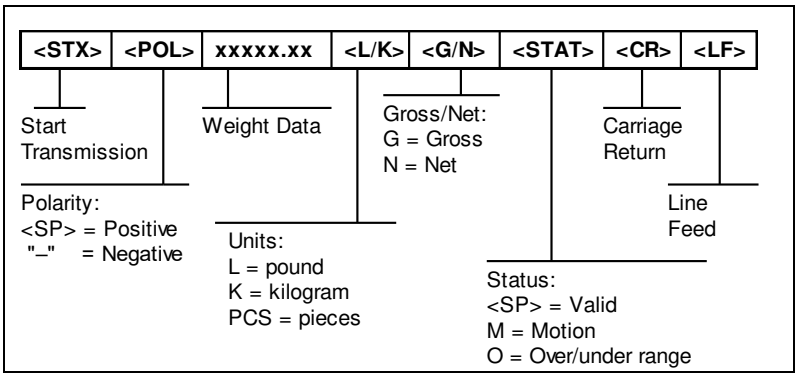

NOTE: Additional units are available:

N = Newtons
O = oz
G= grams
L= pounds
K = grams

SPECIFICATIONS

Instrument Specifications
Enclosure: Aluminum/ABS enclosure (IP54)
Display: 0.8", 6-digit LCD with LED backlight
Upgraded A-to-D converter (AD-02):
Max. Signal Input: ±4.5 mV/V
Resolution: Up to 4,800,000 Internal Counts at 4.5 mV/V
Conversion Rate: 1 to 1200 Hz, selectable
Serial Port: Full Duplex RS-232C
Operating temperature: 14°F to 104°F (-10°C to 40°C)

Battery Power
- 4 AA alkaline
- User replaceable
- 85+ continuous hours of operation under typical operating conditions

ERROR MESSAGES

	Batteries need to be replaced.
Err 99	Functions Menus blocked. Place internal calibration jumper back to its original position.
No-ad	A signal from the load sensor has not been detected.

TROUBLESHOOTING

Issue / Recommendation

"Low Battery" icon blinks on the digital readout, then the instrument powers off.
Replace the batteries.

Instrument turns off on its own.
The instrument has a power conservation feature, set to automatically power off the instrument after 30 minutes of non-use. If your needs require a different setting, call Transcell Tech Support or installer.

Display is erratic or No-Ad message.

- A battery may be fully depleted. If so, this condition can cause erratic displays. Power off the instrument and replace the battery.
- Check the testing machine load cell for any obstructions or foreign debris.
- Loose or faulty connection between the instrument and the load sensor.
- Electromagnetic Interference (EMI). Call Transcell Tech Support or installer.

Transcell Tech Support: 847.419.9180

Limited 12-month Warranty

This product is warranted by TRANSCELL against manufacturing defects in material and workmanship under normal use for twelve (12) months from the date of purchase. For complete warranty details and service information, please contact us at the address below.

Contents subject to change without notice.

Transcell Technology, Inc.
975 Deerfield Parkway
Buffalo Grove, IL 60089
Tel 800.503.9180
Fax 847.419.1515
Web: www.transcell.com
E-mail: sales@transcell.com