transcell®



MODEL
TI-500 RF SS

Manual

Digital Weight Indicator

Version 1.8 September 2, 2025

© Transcell Technology, Inc. 2010-2025. All rights reserved.
The information contained herein is the property of Transcell Technology and is supplied without liability for errors or omissions. No part may be reproduced or used except as authorized by contract or other written permission. The copyright and the foregoing restriction on reproduction and use extend to all media in which the information may be embodied.

Contents subject to change without notice.

Contents

BASIC OPERATION 3
GETTING STARTED 3
OPERATION 3
RECHARGEABLE BATTERY INFORMATION 4
DISPLAY & KEYPAD DETAILS 6
INSTALLATION & OVERVIEW 8
INSTALLATION 8
RS-232 CONNECTIONS (COM2) 10
INDICATOR CONFIGURATION 10
CONFIGURATION MENUS 10
ENTERING THE SETUP (“F”) CONFIGURATION MENU 11
SETUP (“F”) MENU DESCRIPTIONS 12
ENTERING THE USER (“A”) OR COM1 (“C”) MENU 14
USER (“A”) AND COM1 (“C”) MENU DESCRIPTIONS 15
SETTING SYSTEM TIME AND DATE (A20) 18
DIAGNOSTICS (A24) 19
INDICATOR CALIBRATION 20
CALIBRATION OVERVIEW 20
LIVE ZERO CALIBRATION INSTRUCTIONS (F16) 20
SPAN CALIBRATION INSTRUCTIONS (F17) 20
ADVANCED OPERATION 21
WEIGHT HOLD 21
PEAK HOLD MODE 22
PIECE COUNTING 22
MANUAL ACCUMULATION (TOTALING) 23
AUTOMATIC ACCUMULATION (TOTALING) 23
NET WEIGHT 24
PRINTER 24
SET POINT CONTROL (RELAY OPTION) 24
SERIAL PORT INFORMATION 25
SERIAL PORT MODES 25
OUTPUT STRINGS 26

SPECIFICATIONS 28
ERROR MESSAGES 28
TROUBLESHOOTING 29

BASIC OPERATION

Getting Started

Press and hold the ON/PRINT key on the digital indicator unit for two seconds. After a brief initialization period, the scale will revert to a zero (“0”) weight display.

Your scale is now ready for operation!

Operation

Before weighing it is necessary to ensure that the scale is unloaded and indicating zero weight in the desired unit of measure, for example lb for pounds.

If the indicator is not displaying the correct unit of measure, press the UNITS key.

The indicator features an automatic zero correction meaning that small deviations will be zeroed automatically. If the indicator does not automatically determine the zero point, press the ZERO/OFF key.

Balance of page intentionally left blank

Rechargeable battery information

The indicator contains a fused rechargeable battery, which is internal to the unit. The battery chemistry is lead-acid. Before using the indicator for the first time, be sure to charge the battery.

HOW TO CHARGE THE INTERNAL BATTERY

The unit ships with a pre-installed battery charger connector and an external battery charger. Simply link the two up and plug the external battery charger into a suitable AC wall outlet.



External Battery Charger

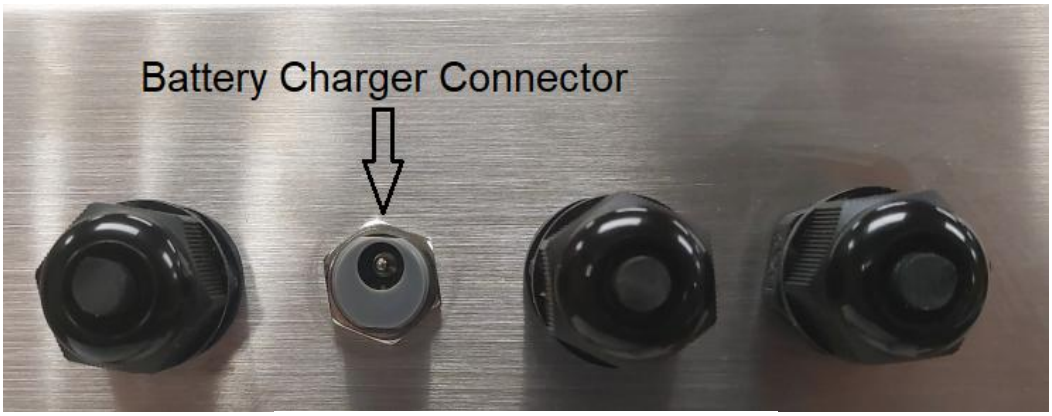

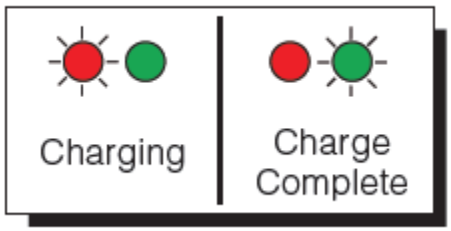

Caution: the external battery charger is rated for IP54 only and exposure to water may void the warranty. Be sure to remove the battery charger from the indicator and apply the rubber boot to the battery charger connector before washing it down.

The indicator's battery should operate for about 85 hours if left on continuously. The display unit is configured to power down after 5 minutes of inactivity, but this parameter can be changed thru the A10 menu setting.

The battery can be charged while ON or OFF and the indicator can be operated while it's charging unless the state of charge is very low.

WHEN TO CHARGE THE INTERNAL BATTERY

The best time to charge the lead-acid battery is any time the indicator is not in use. You need not wait for the Low Battery Indication – in fact it's best that you don't.

When the battery has been discharged below 30%, the Low Battery Indication will start blinking in the lower left-hand corner of the display. The indicator may be used for an additional two (2) minutes before it automatically powers down. ***When the system reaches this state, it is imperative that you charge the battery to avoid permanent damage.***

REPLACING THE BATTERY

The recommended practice when removing the battery is to disconnect the ground connection (black) first, then the red terminal. This ensures that a short circuit will not occur from a battery lead or fuse lead touching the grounded housing while disconnecting the other terminal. Similarly, the ground should be connected last when installing a new battery.

The US government has classified the internal battery as hazardous waste. Do not place battery into landfill. An automotive store or a local waste agency may accept the batteries for recycling. Contact the battery manufacturer for more information.

DISPLAY & KEYPAD DETAILS

This indicator uses a 6-digit LCD (Liquid Crystal Display) with adjustable LED backlight. The Table below summarizes the display annunciators.



Symbol	Display Indication
→0←	Displays when the indicator reading is at “Center of Zero”.
P	The indicator is in Peak Hold mode.
T	A tare weight has been established in the system
G	The indicator is in Gross Weight mode.
N	The indicator is in Net Weight mode.
lb	The displayed weight reading is in pounds (lb).
kg	The displayed weight reading is in kilograms (kg).
g	The displayed weight reading is in grams (g).
oz	The displayed weight reading is in ounces (oz).
pcs	The displayed reading is in pieces (piece counting).
◣◢	Displays whenever the weight reading is stable (not in motion).
▭	When blinking, the battery needs to be recharged soon.

Notes about the backlight:

1. If no keys are pressed within 60 seconds, the backlight will switch off to save battery life. You can wake up the backlight by pressing any key.
2. If no motion is detected on the scale platform within 60 seconds, the backlight will switch off to save battery life. You can wake up the backlight by disturbing the load on the platform.

The keypad comprises five (5) function keys.



Marking	Keypad Function
Units	Selects the displayed unit of measure, e.g., lb or kg.
Zero/Off	Zeroes the weight display reading, provided certain conditions are met. **Press and hold for about five seconds to shut the indicator OFF.**
Net/Gross	Selects the weighing mode, i.e., Gross weight or Net Weight.
Tare	Establishes a system Tare, provided certain conditions are met
On/Print	Press and hold for a few seconds to turn the indicator ON. Sends the displayed weight reading to the serial communication port, provided certain conditions are met

Conditional keypad functions:

TARE
Indicator reading must not be in motion or displaying an error message. Gross weight must be greater than zero.

ZERO
Indicator reading must not be in motion or displaying an error message. Operation may be restricted by the Zero Reset Range setting (see F4 menu parameter).

PRINT
Indicator reading must not be in motion or displaying an error message.

Press and Hold keypad functions:

You will hear a double beep for all press and hold functions, except:

- the initial turn on event (no beep) and
- entering the Configuration Menu (one beep).

Automatic Power Off:

By default, the unit will automatically power off if no keys are pressed and the load on the scale platform remains stable within a five (5) minute period. During the last five seconds, the display will count down by adding underscores ("_"). The indicator displays 'oFF' and then automatically powers off.

INSTALLATION & OVERVIEW

Remember that the installer is ultimately responsible to assure that a particular installation will be and remain safe and operable under the specific conditions encountered.

The indicator must be properly configured and calibrated prior to use.

Installation

Find a suitable location for the indicator and use the included bracket to mount the unit to a wall or table. Use this handy guide for mounting the bracket to a wall or table:

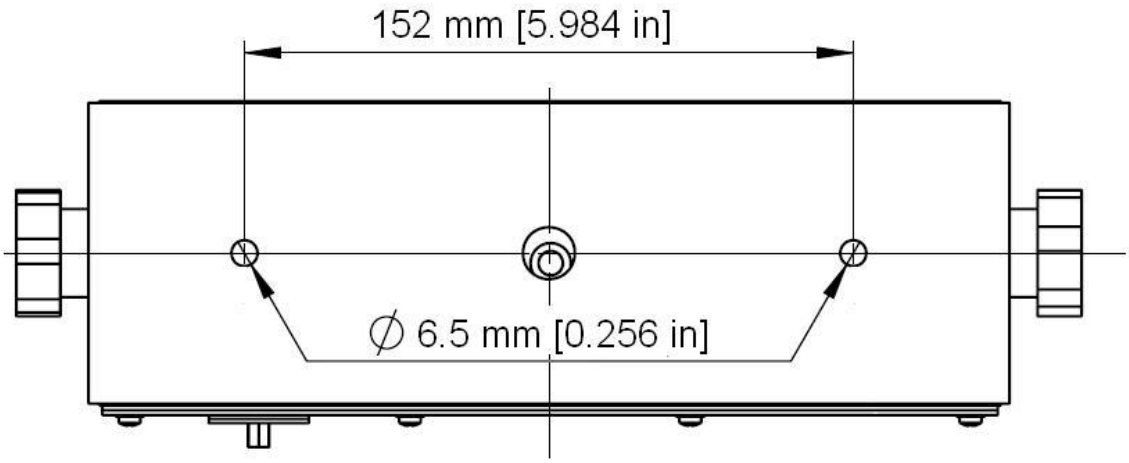

CONNECTIONS

The rear cover must first be removed to make the appropriate connections to the weighing platform, junction box, etc. To remove the rear cover, simply remove the screws that secure it to the enclosure and set aside.

Caution! Disconnect battery charger from indicator prior to removing rear cover.

Caution! Disconnect leads from rechargeable battery to avoid shorts!

Caution! Strip each load cell wire back 10 mm and tin before inserting into the spring-loaded terminals.

Load Cell Connections

Connect your shielded load cell cable to the spring-loaded terminal block using the table below. Use F11 to configure the unit for either 4-wire or 6-wire load cells.

Universal Terminal Block (J3)

Marking	Function		Marking	Function
E-	- Excitation		SE+	+ Sense
SE-	- Sense		E+	+ Excitation
S-	- Signal		SH	Shield
S+	+ Signal			

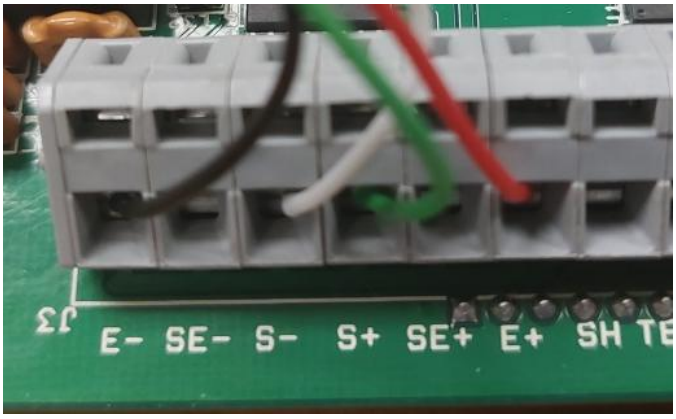

Load Cell Terminals

DC Power Connections

V+ and V– are the DC power connections to the board:



RS-232 Connections (COM2)

The indicator ships with a “piggyback” RS-232 communication board plugged into socket JR1. Configure using the User (“A”) menu.

Connect your RS-232 serial cable to the “piggyback” board using the table below.

COM2 / RS-232 Solder Pad (J6)

Pin No.	Function
1	Receive Data
2	Transmit Data
3	Signal Ground

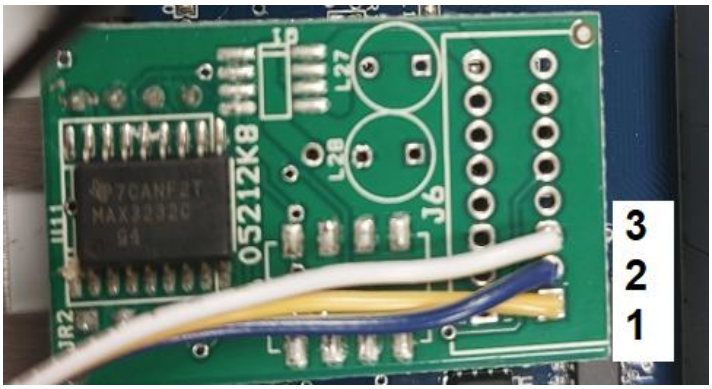

INDICATOR CONFIGURATION

Configuration Menus

The TI-500 RF SS contains three (3) menus to configure the indicator:

Setup (“F”) Menu **–** Configures all metrologically-related parameters including calibration procedures.

User (“A”) Menu **–** Configures COM2 communication parameters and other misc. parameters, e.g., automatic turn off.

COM1 (“C”) Menu **–** Configures COM1 communication parameters.

The configuration menus are laid out in the following vertical arrangement:

- Top [Menu selection] level
- Parameter level
- Selection level (or function level, e.g., span calibration)

Please review the following chart to get a feel for how to navigate among the various menus and parameters.

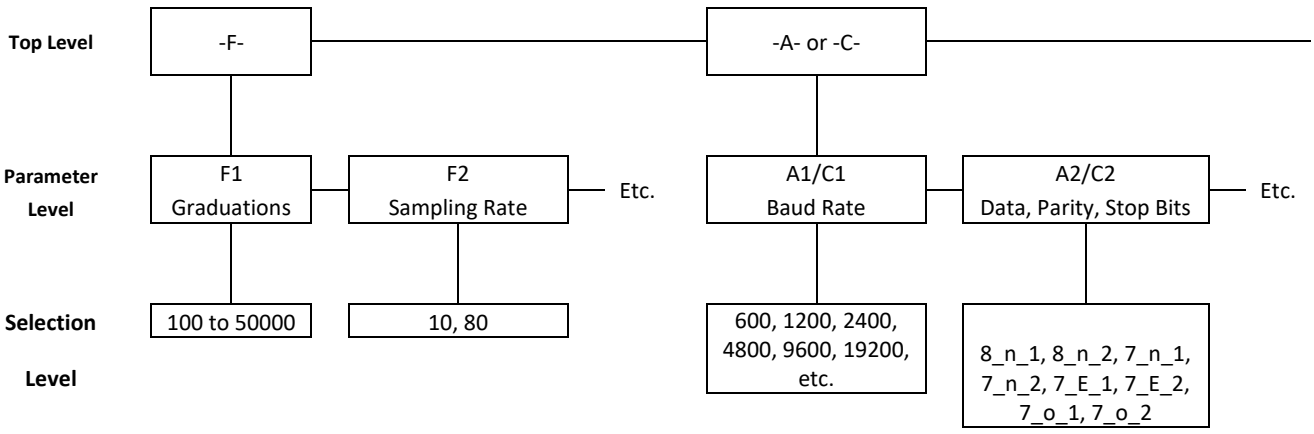

Entering the Setup ("F") Configuration Menu

1. Switch off the indicator by pressing and holding down the ZERO/OFF key for about 5 seconds.
2. Press and hold down the ON/PRINT key (about 20 seconds) until the screen shows "-F-".
3. Scroll down using the ZERO/OFF (down) key to reach the parameter level. The indicator shows "F 1".
4. Move from one "F" menu parameter to the next by using the TARE (left) or ON/PRINT (right) keys. For example, to go from F1 to F2, press the ON/PRINT key. To go from F2 back to F1, press the TARE key.
5. Once you have arrived at the proper "F" menu parameter, e.g.," F 1", press the ZERO/OFF (down) key once to arrive at the selection level. The indicator displays the current parameter setting.
6. If there is a selection list, scroll through the available parameter settings, use the TARE (left) or ON/PRINT (right) keys. Otherwise, use the arrow keys to adjust the displayed value to the new value.
7. Once the setting you want is displayed on the screen, press the NET/GROSS (set) key to save this value and revert up to the parameter level, e.g.," F 1".

To save all parameter settings, it is imperative to exit all menus in the following manner: At the parameter level, press the UNITS (up) key twice (two times) to exit the Setup Menu. The indicator displays 'oFF' and then automatically powers off.

Setup ("F") Menu Descriptions

This section provides more detailed descriptions of the selections found in the Setup Menu Chart. Factory-set defaults are shown in **bold** with a checkmark; **(√)**.

CODE/NAME	DESCRIPTION	SELECTION LIST
F1 Graduations	Sets the number of full-scale graduations, i.e., max capacity ÷ display division (d).	Key-in 100 - 50000 **10000 √**
F2 Sampling Rate	Sets the sampling rate in Hertz (measurements per second).	**10 √** 80
F3 Zero Track Band	Selects the range within which the scale will automatically zero. Selections are in display divisions per second (d/s).	oFF 0.25 **0.5 √** 1 3 5
F4 Zero Range	Selects the range within which the scale may be zeroed. Selections are expressed as a percentage of maximum capacity.	Key-in 0 - 100 **100 √**
F5 Motion Band	Selects the level at which motion is detected. Selections are expressed as display divisions per second (d/s).	oFF 0.5 **1 √** 2 4 8 16 32
F6 Digital Filter	Averages weight readings to produce higher stability. Choose the speed that works best for your application. "FASt" = Fast "nnEd" = Medium "SLo" = Slow	FASt **nnEd √** SLo
F7 Overload Limit	Selects the desired formula which determines the point at which the indicator shows overload. All selections are based on the primary unit selected in F8. "FS" = Full Scale capacity "FS 2" = Full Scale + 2% "FS 5" = Full Scale + 5% "FS 1d" = Full Scale + 1d "FS 9d" = Full Scale + 9d	FS **FS 2√** FS 5 FS 1d FS 9d
F8 Calibration Unit	Selects the primary base unit to be used in the calibration process. Also, the default unit for normal operation. "1" = primary unit is lb "2" = primary unit is kg "3" = primary unit is oz "4" = primary unit is g	**1 √** 2 3 4
F9 Display Divisions	Sets the interval value. Use together with F10.	**1 √** 2 5
F10 Decimal Pt.	Sets the decimal point value. Use together with F9.	**0 √** 0.0 0.00 0.000 0.0000 00
F11 No. of L/C wires	Selects the number of wires from the load cell / junction box to be connected to the indicator. "4" = four wires "6" = six wires (SENSE)	**4 √** 6

CODE/NAME	DESCRIPTION	SELECTION LIST
F12 Percentage Hold Weight	Selects the percentage (of the displayed held value) of weight change before the scale automatically unlocks the held weight and relocks onto the new weight. Use together with A11.	5 **10** √ 20 50 75 100
F13 Gravity (g)	Selects the gravity (g) of the location of the scale system. Expressed in m/s^2.	Key-in 9.750 to 9.850 **9.800** √
F14 Power-on zero (IZSM)	Allows you to enable or disable power-on zero. (IZSM) "yES" = IZSM is enabled "no" = IZSM is disabled	**yES** √ no
F16 Zero Calibration	Places indicator into zero-calibration mode.	Press **ZERO/OFF** key to begin sequence
F17 Span Calibration	Places indicator into span calibration mode.	Press **ZERO/OFF** key to begin sequence
F18 View Calibration	Allows you to view the zero and span calibration values.	Press **ZERO/OFF** key to begin sequence
F19 Key-in Zero	Allows you to key-in a known zero calibration value	Press **ZERO/OFF** key to begin sequence
F20 Key-in Span	Allows you to key-in known span calibration values.	Press **ZERO/OFF** key to begin sequence
F21 Factory Reset (US)	This sub-menu will reset all parameters in the “F” and “A” menu to the default settings. It will not overwrite any previously saved calibration data. **USE WITH CAUTION!**	Press the **ZERO/OFF** key twice to execute
F22 Factory Reset (EU)	This sub-menu will reset all parameters in the “F” and “A” menu to the default settings. It will not overwrite any previously saved calibration data. **USE WITH CAUTION!**	Press the **ZERO/OFF** key twice to execute
F23 Full Factory Reset	This sub-menu will reset all system parameters to the default settings. It will not overwrite any previously saved calibration data. **USE WITH EXTREME CAUTION!**	Press the **ZERO/OFF** key twice to execute
F24 Fine Tune 4-20 mA	Actuates the function that allows you to fine-tune the optional 4-20 mA analog output.	Press the **ZERO/OFF** key to begin sequence
F25 Set Point Function	Selects the function of the set points and relay outputs.	0 to 10 **0** √
F26 Lower Threshold Weight	Selects the weight <u>below</u> which the auto-accumulation function will re-arm itself. Key-in the weight value (in the primary unit). F30 must be set to “1”. “0” = Disabled (manual accumulation)	Key-in 0 - 999999 **00000** √

CODE/NAME	DESCRIPTION	SELECTION LIST
F27 Upper Threshold Weight	Selects the weight above which the auto-accumulation function will re-arm itself. Key-in the weight value (in the primary unit). F30 must be set to "1". "0" = Disabled (manual accumulation)	Key-in 0 - 999999 **00000** √
F29 Load Cell Input	Selects the load cell input source. "AdC" = Internal A/D (cabled), "1rAdIo" = One external wireless A/D module, "2rAdIo" = Two external wireless A/D modules "4 AdC" = JB Digital Series	**AdC** √ 1rAdIo 2rAdIo **4 AdC**
F30 Special Application	Select one of the special application features. "0" = None (Gross/Net), "1" = Accumulator, "2" = Remote Display, "3" = Piece Count, "5" = Hold, "6" = Set Point	**0** √ 1 2 3 5 6
F31 Gross Zero Band	Selects the range within which the scale will automatically clear the tare and switch to Gross mode. Note that the scale must be stable. Selections are in display divisions (d). "0" = Disabled	Key-in 0 - 10 **00** √
F32 Center of Zero Band	Selects the range around gross zero within which the scale will display the Center of Zero annunciator. Selections are in display divisions (d).	**0.25** √ 0.5
F34 Auto Print Min. Weight	Selects the minimum weight at which the auto print function will work if enabled. Selections are in display divisions (d). "0" = Disabled	Key-in 0 - 100 **001** √

A few notes about F30:

1. F30 = 1 (accumulation); set A6 to "2" to activate the subtotal printout
2. F30 = 1 (accumulation); please review F26 and F27 for additional configuration information
3. F30 = 5 (hold); please review A11 for additional configuration information

Entering the User ("A") or COM1 ("C") Menu

NOTE: Follow the same steps to enter the COM1 ("C") Menu– just substitute "C" for "A" below

1. Switch off the indicator by pressing and holding down the ZERO/OFF key for about 5 seconds.
2. Press and hold down the ON/PRINT key (about 20 seconds) until the screen shows "-F-".
3. Press the ON/PRINT (right) key once. The screen displays "-A-".
4. Scroll down using the ZERO/OFF (down) key to reach the parameter level. The indicator shows "A 1".
5. Move from one "A" parameter to the next by using the TARE (left) or ON/PRINT (right) keys. For example, to go from A1 to A2, press the ON/OFF key. To go from A2 back to A1, press the DATA key.

6. Once you have arrived at the proper “A” menu parameter, e.g. “A 1”, press the ZERO/OFF (down) key once to arrive at the selection level. The indicator displays the current parameter setting.
7. If there is a selection list, scroll through the available parameter settings, use the TARE (left) or ON/PRINT (right) keys. Otherwise, use the arrow keys to adjust the displayed value to the new value.
8. Once the setting you want is displayed on the screen, press the NET/GROSS (set) key to save this value and revert up to the parameter level, e.g. “A 1”.

To save all parameter settings, it is imperative to exit all menus in the following manner: At the parameter level, press the UNITS (up) key twice (two times) to exit the User Menu. The indicator displays ‘oFF’ and then automatically powers off.

User (“A”) and COM1 (“C”) Menu Descriptions

This section provides more detailed descriptions of the selections found in the User Menu Chart. Factory-set defaults are shown in **bold** with a checkmark; **(√)**.

CODE/NAME	DESCRIPTION	SELECTION LIST
A1/C1 Baud Rate	Selects the baud rate for data transmission through the serial port.	600, 1200, 2400, 4800, **9600** √, 19200, 38400, 57600, 115200
A2/C2 Data Bits, Parity and Stop Bits	Selects the number of data bits and parity of serial transmission. "8_n_1" = 8 data bits with no parity bit and one stop bit "8_n_2" = 8 data bits with no parity bit and two stop bits "7_n_1" = 7 data bits with no parity bit and one stop bit "7_n_2" = 7 data bits with no parity bit and two stop bits "7_E_1" = 7 data bits with even parity bit and one stop bit "7_E_2" = 7 data bits with even parity bit and two stop bits "7_o_1" = 7 data bits with odd parity bit and one stop bit "7_o_2" = 7 data bits with odd parity bit and two stop bits	**8_n_1** √ 8_n_2 7_n_1 7_n_2 7_E_1 7_E_2 7_o_1 7_o_2
A3/C3 Serial Port Mode	Selects the mode of the serial port: Refer to Serial Port Info section for more information. "0" = Demand Full Duplex "1" = Continuous Full Duplex “2” = Auto Print “3” = RFID “4” = Test and Measurement “5” = configure analog option card to 4-20 mA “6” = configure analog option card to 0-10 V	**0** √ 1 2 3 4 5 (A3 only) 6 (A3 only)
A4 MP-20 Print Header	Instructs the MP-20 printer to print the header information. Valid only when **A6** is set to “2” or “4”. "0" = Do NOT Print Header "1" = Print Header	**0** √ 1
A5 Units Key	Selects the function of the Units key. **NOTE**: The UNITS key will not function if ounces or grams are selected for F8. "no" = Disabled "yES" = Enabled	no **yES** √

CODE/NAME	DESCRIPTION	SELECTION LIST
A6/C6 Output String	Selects fixed output string for serial port. Refer to Serial Port Info section for details. "0" = Condec Demand, "1" = Condec Continuous "2" = Text Print Ticket (MP-20) “3” = Text Print Ticket with Auto Label Feed (MP-20) “4” = Cardinal 190 Scoreboard emulation ([1]) "5" = 6L.BAS = 6 lines, Label "6" = 6P.BAS = 6 lines, Paper (Default) "7" = 6LB.BAS = 6 lines, Label, Barcode "8" = 6PB.BAS = 6 lines, Paper, Barcode "9” = CUSTOM.BAS	**0 √ (A6)** 1 **2 √ (C6)** 3 4 5 6 7 8 9
A7 ID Number	Selects the ID number mode. "no" = Disabled "yES" = Enabled	**no √** yES
A8 Set ID Number	Allows you to key in an ID number.	Key-in 0 to 999999 **123456 √**
A9/C9 Line Feeds	Allows you to key-in the number of line feeds.	Key-in 0 to 99 **08 √**
A10 Auto Power Off	Allows you to configure the automatic power off time. The unit will power off if no keys are pressed and the load on the scale platform remains stable. Selections are minutes.	Key-in 0 to 30 **05 √**
A11 Hold Mode	Selects specific Hold Mode. F30 must be set to “5”. “0" = Off	**0 √** 1 2 3
A12 Backlight Brightness	Selects brightness of the LED backlight. Selections are in % of full brightness.	0 (Off) 20 50 75 **100 √**
A13/C13 Handshaking	Selects function of the hardware handshaking. (NOTE: Receive pin is used for handshaking). "0" = Disabled "1" = Enabled	**0 √** 1
A18 Date	Selects function of the printed date. "no" = Disabled "yES" = Enabled	**no √** yES
A19 Date Format	Selects the printed format of the date. "USA" = mm/dd/yy "intL" = dd/mm/yy	**USA √** **i**ntL
A20 Set System Time & Date	Allows you to set the system time and date.	Press **ZERO/OFF** key to begin sequence

[1] Baud rate (A1/C1) must be set to “19200”

CODE/NAME	DESCRIPTION	SELECTION LIST
A22 Low Battery Auto Power Off	Allows you to configure the automatic power off time of the indicator after it enters a low battery condition. Selections are expressed in minutes.	Key-in 0 to 99 **02** √
A23 Audible Key Feedback	Selects function of the audible key feedback (beeper). "no" = Disabled "yES" = Enabled	no **yES** √
A24 Diagnostics	Used to access the listed test functions (one at a time). "A24-U1" = Display segment test, "A24-U2" = A/D converter test, “A24-U3” = Input test, “A24-U4” = Output test (all) “A24-U5” = Serial Port test (both), “A24-U6” = Keyboard test “A24-U7” NTEP test mode	Press **ZERO/OFF** key to begin sequence
A25 Decimal Point	Selects printed (not displayed) decimal point character. "0" = Period (‘.’) "1" = Comma (‘,’)	**0** √ 1
A26 Remote Keyboard	Allows the keyboard of the remote display to operate the indicator. Only works with a Transcell TI500 RF set to operate in remote display emulation mode. "no" = Disabled "yES" = Enabled	**no** √ yES
A30 Upload EID Database	Actuates the function which transmits the EID database information to all serial ports configured for RFID serial port mode (A3/C3).	Press **ZERO/OFF** key to begin sequence
A31 Clear EID database	Allows you to clear the stored EID database. This process may take some time to complete.	Press **ZERO/OFF** key to begin sequence
A32 Assign remote key #1	Allows you to assign any one of the front panel keys to the digital I/O board input #1 for remote control / input. **Not active currently**.	**0** √ 1 2 3 4 5
A33 Assign remote key #2	Allows you to assign any one of the front panel keys to the digital I/O board input #2 for remote control / input. **Not active currently**.	**0** √ 1 2 3 4 5
A34 Correction Sensor Setting	Correction sensor setting. "0" = Disable Angle Sensor "1" = Compensation with no Angle Limits “2” = Compensation with NTEP Limits	**0** √ 1 2

Setting system time and date (A20)

The system time is displayed in military (24-hr) format or hh.mm.ss. For example, 09.00.00 is 9:00 AM and 17.00.00 is 5:00 PM.

1. Switch off the indicator by pressing and holding down the ZERO/OFF key for about 5 seconds.
2. Press and hold down the ON/PRINT key (about 20 seconds) until the screen shows "-F-".
3. Press the ON/PRINT (right) key once. The screen displays "-A-".
4. Scroll down using the ZERO/OFF (down) key to reach the parameter level. The scale shows "A 1".
5. Move from A1 to A20 by pressing the TARE (left) key repeatedly until the screen shows "A 20".
6. Once you have arrived at A20 press the ZERO/OFF (down) key once. The screen displays "ho_xx" where 'xx' is the current hour, e.g., "15". One digit will be flashing.
7. If necessary, use the four directional keys to adjust the displayed value to the actual hour value. Increase the flashing digit by pressing the UNITS key. Decrease the flashing digit by pressing the ZERO/OFF key. Pressing the TARE key or the ON/PRINT key will change the position of the flashing digit.
8. After entering the exact value, press the NET/GROSS key to save the value. The screen displays "n¬_xx" where 'xx' is the current minute, e.g., "55". One digit will be flashing.
9. If necessary, use the four directional keys to adjust the displayed value to the actual minute value. Increase the flashing digit by pressing the UNITS key. Decrease the flashing digit by pressing the ZERO/OFF key. Pressing the TARE key or the ON/PRINT key will change the position of the flashing digit.
10. After entering the exact value, press the NET/GROSS key to save the value. The screen displays "dA_xx" where 'xx' is the current day of the month, e.g., "14". One digit will be flashing.
11. If necessary, use the four directional keys to adjust the displayed value to the actual day value. Increase the flashing digit by pressing the UNITS key. Decrease the flashing digit by pressing the ZERO/OFF key. Pressing the TARE key or the ON/PRINT key will change the position of the flashing digit.
12. After entering the exact value, press the NET/GROSS key to save the value. The screen displays "n¬_xx" where 'xx' is the current month of the year, e.g., "02". One digit will be flashing.
13. If necessary, use the four directional keys to adjust the displayed value to the actual month value. Increase the flashing digit by pressing the UNITS key. Decrease the flashing digit by pressing the ZERO/OFF key. Pressing the TARE key or the ON/PRINT key will change the position of the flashing digit.
14. After entering the exact value, press the NET/GROSS key to save the value. The screen displays "yE_xx" where 'xx' is the current month of the year, e.g., "11". One digit will be flashing.
15. If necessary, use the four directional keys to adjust the displayed value to the actual year value. Increase the flashing digit by pressing the UNITS key. Decrease the flashing digit by pressing the ZERO/OFF key. Pressing the TARE key or the ON/PRINT key will change the position of the flashing digit.

16. After entering the exact value, press the NET/GROSS key to save the value and revert up to the parameter level, e.g., ”A 20”.

To save all parameter settings, it is imperative to exit all menus in the following manner: At the parameter level, press the UNITS (up) key twice (two times) to exit the User Menu. The indicator displays ‘oFF’ and then automatically powers off.

Diagnostics (A24)

Here is a brief description of each test mode:

A24-U1 Display Test – Lights up all display segments, counting down from 666666 to 11111. Test ends automatically when complete.

A24-U2 ADC Test – Shows internal A/D converter counts – useful for troubleshooting weighing issues. End the test manually by pressing the NET/GROSS (Set) key.

A24-U3 Input Test – Displays input logic (0 or 1) of input terminal. “0” means the input pin is shunted to ground; “1” means the input pin is open. End the test manually by pressing the NET/GROSS (Set) key.

A24-U4 Output Test – Sets all output pins to ‘ON’. End the test manually by pressing the NET/GROSS (Set) key.

A24-U5 Serial Test – Transmits a data string continuously out both serial ports (“TEST1” on COM1 and “TEST2” on COM2). End the test manually by pressing the NET/GROSS (Set) key.

A24-U6 Keyboard Test – Displays a keycode for each key pressed on the keypad. See Table below. End the test manually by pressing the NET/GROSS (Set) key.

Key	Keycode
Units	1
Zero	2
Net/Gross	3
Tare	4
Print	5

A24-U7 NTEP Mode – This is a special mode which automatically disables zero tracking and automatic shut off; only the ZERO key can function in this mode. End the test manually by pressing the NET/GROSS (Set) key.

INDICATOR CALIBRATION

Calibration Overview

You will be calibrating a scale platform to the indicator using actual loads, e.g., test weights. The calibration procedure comprises two steps: **zero** calibration (F16) and **span** calibration (F17). We recommend doing the **zero** calibration (F16) first.

You can have up to three span calibration points, denoted as C1 through C3. The value of each subsequent calibration point should be higher than the last, e.g., the C2 value should be greater than the C1 value, etc.

You may see dashes appear temporarily on the screen during calibration. This simply means that the indicator is processing data.

Live Zero Calibration Instructions (F16)

1. While in the Setup mode, scroll to "**F 16**", and then scroll down once using the ZERO/OFF (down) key. The display will momentarily show "**C 0**" followed by a value. This value is the internal A/D count and can prove useful when trying to troubleshoot setup problems.
2. Assure a no-load condition on the scale platform and then press the ZERO/OFF key to zero the display reading. Do NOT skip this step!
3. Press the NET/GROSS (set) key to save the zero-point value. The display will show "**SET**" and "**EndC0**" momentarily, and then revert up to F16.

To save all calibration settings, you must exit all menus in the following manner: At the parameter level, press the UNITS (up) key twice (two times) to exit the Setup Menu. The indicator displays 'oFF' and then automatically powers off.

Span Calibration Instructions (F17)

1. While in the Setup mode, scroll to "**F 17**", and then scroll down once using the ZERO (down) key. The indicator will briefly display '**C 1**' and then prompt you to enter the data for the span calibration point (C1).
2. Place the actual calibration load (weights) onto the scale platform.
3. Use the four directional keys to enter in the actual calibration weight value, e.g., 5000 lb. Increase the flashing digit by pressing the UNITS key. Decrease the flashing digit by pressing the ZERO/OFF key. Pressing the TARE key or the ON/PRINT key will change the position of the flashing digit.
4. Press the NET/GROSS (set) key to save the value. The indicator briefly displays **'EndC1'** and then moves to the next calibration point (C2).
5. Repeat steps 2 through 4 to enter data for the remainder of the calibration points. **You need not enter data for all three calibration points. To cease entering additional calibration points, simply enter zero for the new value, e.g., 0.0 lb.**
6. At the end of C3, the indicator displays the current gravity setting, e.g., "9.800". If the local gravity factor is known, then use the up/down and left/right keys to adjust the displayed value. Otherwise, just press the NET/GROSS key to revert up to "F17".

If the calibration was *not* successful, one of the following error messages will appear.

- "**Err0**" - The calibration test load or the keyed-in load is larger than the full capacity of the indicator. Change the calibration test load or check the input data.
- "**Err1**" - The calibration test load or the keyed-in load is smaller than 1% of the full capacity of the indicator. Change the calibration test load or check the input data.
- "**Err2**" – There is not enough signal from the weight sensor to complete the calibration process. Most common causes include incorrect weight sensor wiring, mechanical obstruction or a faulty (damaged) weight sensor.

Take the indicated action to correct the problem, and then perform a new calibration.

To save all calibration settings, you must exit all menus in the following manner: At the parameter level, press the UNITS (up) key twice (two times) to exit the Setup Menu. The indicator displays 'oFF' and then automatically powers off.

ADVANCED OPERATION

Weight Hold

This function captures an unstable load by freezing the weight reading on the display. Use the Motion Band (F5) and Percentage Hold (F12) settings to adjust this operation to your specific application.

To activate this mode, set F30 to "5" in the Setup Menu and then select a mode using A11:

AUTOMATIC (A11 = 1) –When the live load stabilizes within the value defined by the Motion Band (F5) setting, the reading automatically freezes on the screen and two arrows appear underneath the display. If the live load exceeds the value defined by the Percentage Hold (F12) setting (e.g., 10%) then the indicator unlocks the previous reading and locks onto the new weight. This occurs during both increasing and decreasing load values.

MANUAL (A11 = 2) – Before attempting to capture any load, press the ZERO/OFF key to zero the scale and then press the NET/GROSS key. Two arrows appear underneath the display. When the live load stabilizes within the value defined by the Motion Band (F5) setting, the indicator will freeze the reading on the screen. If the live load exceeds the value defined by the Percentage Hold (F12) setting (e.g., 10%) then the indicator unlocks the held reading and relocks onto the new weight. This occurs during both increasing and decreasing load values. Press the NET/GROSS key again to disarm manual hold. Repeat this procedure as required.

Peak Hold Mode

This mode is used to capture peak forces measured during a specific process. These peak force values are held (frozen) on the screen. A common application is determining the breaking point of a part or assembly. Peak forces are not retained when the indicator is powered OFF.

To activate this mode, set F30 to “5” in the Setup Menu and then set A11 to “3” in the User Menu.

1. Push the UNITS key to activate peak hold. The indicator briefly displays “hoLd”, and the “P” annunciator turns ON.
2. Apply force to the item under test. The measured peak force is displayed on the screen.
3. To reset the peak value to zero, press the ZERO/OFF key. Repeat Step #2 as needed.
4. Press the UNITS key again to disarm peak hold. The indicator briefly displays “hoLd”, and the “P” annunciator turns OFF. This action also clears the peak value. Repeat this procedure as required.

Piece Counting

This function calculates (“counts”) the number of items you have placed onto the scale platform. To ensure accuracy, the items you wish to count must be consistent in weight. To activate this mode, set F30 to “3” in the Setup Menu.

The indicator uses the sampling to determine the average piece weight (APW) of the items you wish to count. When sampling items, always count the items in your hand and place them onto the platform all at once. If the APW is too light or the weight of the sample size is too light, accuracy cannot be guaranteed. You will see an error message, but piece counting will still be allowed. This indicator does not retain the piece weight when powered off.

1. If the items you will be counting require a container, you must first tare off the weight of the container by pressing the TARE key.
2. Press the NET/GROSS key. “Add 5” is indicated on the display. The indicator is prompting you to place five (5) identical items on the platform.
3. Place the sample items onto the scale platform all at once and wait a few seconds for the weight to stabilize.
4. Press the NET/GROSS key to take the sample. The indicator now displays the number of pieces on the platform and the “PCS” annunciator is lit.
5. To exit the piece count mode, press the UNITS key.
   NOTE: The APW will NOT remain in scale memory when you exit piece counting mode.

If error messages are encountered, please refer to the notes below and then take the indicated actions to correct the problem.

- If you wish to change the sample size (see Step 2), simply press the UNITS key a few times until the desired sample size appears. Available choices are 5, 10, 20, 25, 50 and 100. You can press the ZERO/OFF key instead to cycle the choices in the opposite direction.

- If the sampling process was not successful, the indicator briefly displays “-Lo_”. Repeat Steps 3 and 4 with the new sample size. If the indicator continues to display “-Lo_” even after sampling 100 pieces, then the unit weight of the items you wish to count is too light for your scale to process accurately.
  Note: You may also see the “-Lo_”. message if the load on the scale platform is not stable.

Manual Accumulation (Totaling)

The function adds multiple weighments together to obtain a total weight. If a tare weight is active, then the net weight is added automatically.

To activate this mode, set F30 to “1” in the Setup Menu and ensure that both F26 and F27 are set to “0”. Accumulated weights are retained when the indicator is powered OFF.

1. Unload the scale platform. If necessary, press the ZERO/OFF key to zero the reading or use the TARE key to set the tare weight.
2. Apply the first load to the scale platform and allow it to stabilize.
3. Press the PRINT key to add the current load to the weight accumulator. The display briefly shows the message “AddEd” and then automatically returns to the weighing mode. If a printer is installed, then a printout will be made.
4. Repeat Steps 1-3 for additional loads to be added. Please note that the scale needs to return to a zero reading before another load can be added.
5. While at Gross Zero, press and hold the ON/PRINT key for about 3-4 seconds to “Total Out”:
   - If loads have been added, the display toggles among the total weight, the number of weighments and the average load weight for approx. 10 seconds. If no key is pressed during this period, then the subtotal stays in memory and the indicator returns to the weighing mode.
   - If the ON/PRINT key is pressed during this period – and a printer is installed - then the total weight is printed.
   - If the ON/PRINT key is pressed and held during this period, then the accumulator is reset to Zero, and nothing is printed.

Automatic Accumulation (Totaling)

The function automatically adds multiple weighments together to obtain a total weight. If a tare weight is active, then the net weight is added automatically. Two arrows will illuminate underneath the weight reading once at least one load has been added.

To activate this mode, set F30 to “1” in the Setup Menu and ensure that both F26 and F27 are set to non-zero values. Accumulated weights are retained when the indicator is powered OFF.

1. Unload the scale platform. If necessary, press the ZERO/OFF key to zero the reading or use the TARE key to set the tare weight.
2. Apply the first load to the scale platform. If the load weight is greater than the Upper Threshold Weight (F27), it will automatically be added to the weight accumulator once the load stabilizes. The display briefly shows the message “AddEd” and then returns to the weighing mode. If a printer is installed, a printout will be made.

3. Repeat Steps 1 and 2 for additional loads to be added. Please note that the load needs to briefly drop below the Lower Threshold Weight (F26) before another weight can be added.
4. While at Gross Zero, press and hold the ON/PRINT key for about 3-4 seconds to “Total Out”:
    - If loads have been added, the display toggles among the total weight, the number of weighments and the average load weight for approx. 10 seconds. If no key is pressed during this period, then the subtotal stays in memory and the indicator returns to the weighing mode.
    - If the ON/PRINT key is pressed during this period – and a printer is installed - then the total weight is printed.
    - If the ON/PRINT key is pressed and held during this period, then the accumulator is reset to Zero, and nothing is printed.

Net Weight

Gross weight refers to the total weight of a material plus its container. Conversely, **net weight** refers to the weight of the material alone, minus the weight of its container; and **tare weight** is the weight of the container alone.

Tare weights are retained when the indicator is powered OFF. If a tare weight is present at startup, the indicator will revert to NET weighing mode and apply the stored tare weight.

1. If weighing an item in a container, place the empty container onto the scale’s platter.
2. After allowing the weight indication to stabilize, press the TARE key. The display shows zero weight, and the NET annunciator is activated.
3. Place the object to be weighed on the scale’s platter and allow the weight indication to stabilize. The reading shown is the net value of the applied load.
4. Toggle between the gross weight and the net weight by pressing the NET/GROSS key.
5. Press the TARE key again to clear the tare value and return to gross weighing mode.

Printer

If the weighing system has been equipped with a printer, then system data can be printed by pressing the PRINT key. Here is an example of a possible printout:

```
ID.NO.            123456
DATE            01/28/22
TIME            10:23 AM
GROSS            1067 lb
TARE               67 lb
NET              1000 lb
PCS              1000
```

Notes that some fields may not appear on your printout, depending upon your configuration settings, etc.

Set Point Control (RELAY OPTION)

Please reference separate instruction sheet for this option

SERIAL PORT INFORMATION

SERIAL PORT MODES

DEMAND DUPLEX MODE

The Demand Duplex Mode provides a two-way serial transmission mode. In this mode, the output information is transmitted on demand; either by pressing the ON/PRINT key on the indicator's front panel or upon receiving a recognized command from a host device (i.e., computer).

NOTE: Ensure that your cabling has a crossover (null modem) and contains the proper handshaking lines.

CONTINUOUS DUPLEX MODE

The Continuous Duplex Mode provides a two-way serial transmission mode. In this mode, the output information is transmitted continuously making it a popular choice for remote displays and other remote devices requiring a constant data stream. The transmission automatically occurs at the end of each display update. The indicator will react upon receiving a recognized command from a host device.

RECOGNIZED HOST COMMANDS (applies to both demand and continuous duplex modes)

ASCII code (Hex)	Symbol	Action by the indicator
50 or 70	P or p	Transmit the displayed weight data through the serial port.
5A or 7A	Z or z	Zero the indicator
43 or 63	C or c	Change the displayed unit of measure
46 or 66	F or f	Transmit the firmware version through the serial port.

AUTO PRINT MODE

The Auto Print Mode provides a one-time serial transmission once a non-zero, stable condition is achieved.

OUTPUT STRINGS

TEXT PRINT TICKET

The Text Print Ticket is designed specifically for a serial printer.

```
GROSS       1000.0  lb
```

STRING FORMAT 1 (Condec Demand String)

String Format 1 is designed for two-way communication.

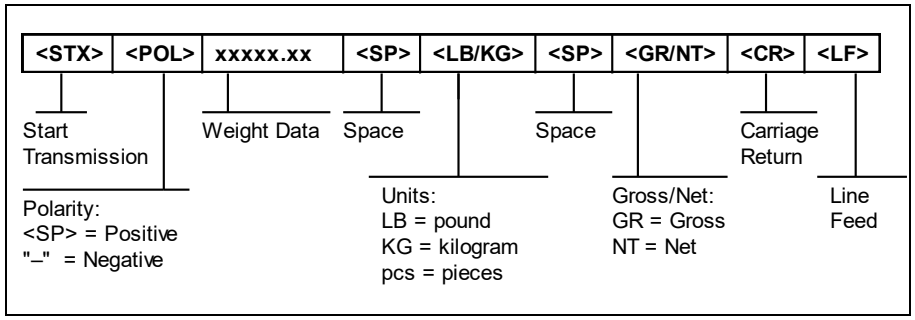

NOTE: Additional unit is available:

oz = ounce
g<space> = grams
lb = pounds
kg = kilograms

STRING FORMAT 2 (Condec Continuous String)

String Format 1 is designed for one-way communication.

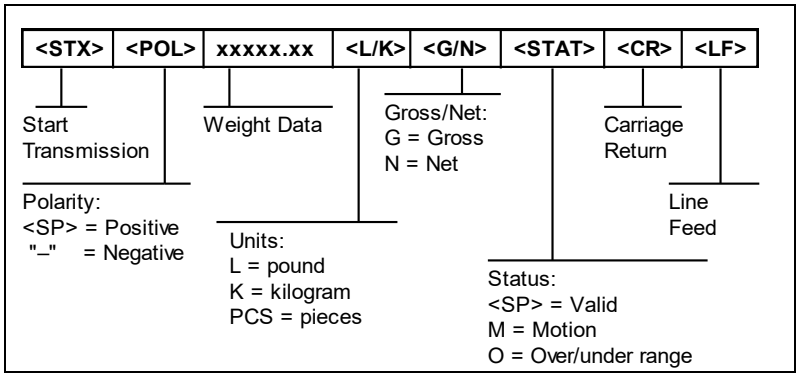

NOTE: Additional unit is available:

O = oz
G= grams
L= pounds
K = grams

6L, 6P, 6LB, 6PB, and CUSTOM Strings

These strings are designed for use with the **TDP-225** serial printer. Use the A6/C6 menus to select the format you want.

- 6L.BAS: 6 lines, formatted for 2” Labels, human readable only.
- 6P.BAS: 6 lines, formatted for Paper Roll, human readable only.
- 6LB.BAS: 6 lines, formatted for 2” Labels, human readable + barcode.
- 6PB.BAS: 6 lines, formatted for Paper Roll, human readable + barcode.
- CUSTOM.BAS: Custom print formatting is available, please contact your sales representative for more details.
- The fields to be printed – and the order in which they are printed - are defined by the indicator.
- Certain indicator models may not support all 6 fields. If there are only 4 fields to be printed, the printer prints all 6 lines. Any blank lines will be “printed” as blank.
- The format of the barcode is Code 128

Examples of information printed using various formats:

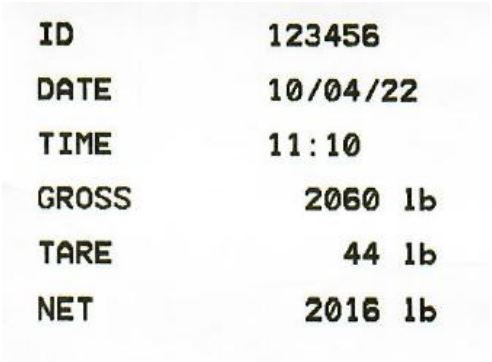

6P.BAS



6PB/9PB.BAS

SPECIFICATIONS

Enclosure: Stainless Steel (IP65)
Display: 0.8", 6-digit LCD with LED backlight
A-to-D converter: AD-01
Resolution: Approximately 800,000 counts at 3mV/V input
Sampling Rate: 10 or 80 Hz, selectable
Excitation Voltage: +3.3 Vdc, 8 x 350Ω load cells
Input Signal Range: ±3.125 mV/V
Serial Port: Full Duplex RS-232C
Operating Temperature: 14°F to 104°F (-10°C to 40°C)
Fuse: (0.8A, 5 X 20MM)

Battery Power
- 6-volt 3 Ah internal rechargeable lead acid battery
- 115+ continuous hours of operation on full charge under typical operating conditions

ERROR MESSAGES

	The weighing capacity of the scale has been exceeded.
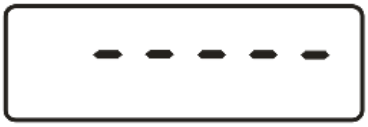	The weight on the scale platform is below Gross zero. Press the **Zero/Off** key.
	Battery needs to be recharged.
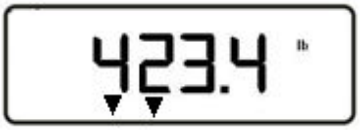	Hold Mode: Indicates that the displayed reading is being held. Accumulation mode: Indicates that at least one load has been added.
"Err 08"	Accumulation mode: You are trying to total out and the scale is not at zero.
"Err 99"	Setup menus blocked. Flip the switch on the rear panel to the opposite position.
"no Ad"	A signal from the load cell / weighing platform has not been detected.

TROUBLESHOOTING

Issue / Recommendation

"Low Battery" icon blinks on the digital readout, then the indicator powers off.
Recharge or replace the battery.

Weight reads out lower at one end of the weighing platform than the other end.
- Check for any type of mechanical binding or impingement of scale that is displaying the lower weight
- Check underneath the scale for any obstructions or foreign debris
- Make sure that the scale feet are not screwed in so far as to restrict downward movement of the scale.
- Adjust platform corners using variable trimmer junction box (if supplied)

Indicator displays six small zeros.
- Scale is overloaded. Remove weight from scale.
- Cut, damaged, loose, pinched cable between indicator and platform or within platform with multiple load cells (*cabled configuration only)
- A Load cell is damaged on the scale platform
- Internal fault with indicator; call Transcell Tech Support

Scale turns off on its own.
The indicator has a power conservation feature set to automatically power off the scale after 5 minutes of non-use. If your needs require a different setting, call Transcell Tech Support or installer.

Display is erratic.
- Depleted batteries can cause erratic displays. Power off the indicator and recharge the batteries.
- Check underneath the scale for any obstructions or foreign debris

Transcell Tech Support: 847.419.9180

Limited 12-month Warranty

This product is warranted by TRANSCELL against manufacturing defects in material and workmanship under normal use for twelve (12) months from the date of purchase. For complete warranty details and service information, please contact us at the address below.

Contents subject to change without notice.

Transcell Technology, Inc.
975 Deerfield Parkway
Buffalo Grove, IL 60089
Tel 800.503.9180
Fax 847.419.1515
Web: www.transcell.com
E-mail: sales@transcell.com