transcell®



MODEL
TI-700K / G-700K

User Manual

PN 210510 Rev H November 16, 2026

Digital Weight Indicator

Firmware Version 1.81 (“04-23”)

Table of Contents

BASIC OPERATION 3
Getting Started – Cabled Systems 3
Getting Started – Wireless Systems 3
Operation – TI-700K 3
Operation – TI-500 RFTM 3
Replacing the batteries – TI-500 RFTM 4
Optional Rechargeable battery information – TI-700K 4
DISPLAY & KEYPAD DETAILS 6
INSTALLATION & OVERVIEW 8
Scope of TI-700K 8
Installation of TI-700K digital indicator 9
RS-232 Connections (COM1) 10
Power Connections (AC version) 11
Power Connections (Optional Rechargeable Battery version) 11
External USB 2.0 Port (COM2) 12
Installation of TI-500 RFTM remote wireless A/D Module 12
INDICATOR CONFIGURATION 13
Configuration Menus 13
Entering the Setup (“F”) Configuration Menu 14
Setup (“F”) Menu Descriptions 15
Entering the User/COM1 (“A1”) Menu 19
User/COM1 (“A1”) Menu Descriptions 20
Setting system time and date (A1-20) 23
Diagnostics (A1-24) 23
Entering the COM2 (“A2”) Menu 24
COM2 (“A2”) Menu Descriptions 24
INDICATOR CALIBRATION 25
Calibration Overview 25
Live Calibration Overview 25
Live Zero Calibration Instructions (F16) 25
Live Span Calibration Instructions (F17) 26
mV/V Span Calibration (F52) 26
ADVANCED OPERATION 27
Weight Hold 27
Peak Hold 28
Piece Counting 28
Accumulation (Totaling) 29
Net Weight 29

Printer 29
Static Checkweigher 30
SERIAL (COM) PORT INFORMATION 31
SERIAL PORT MODES 31
OUTPUT STRINGS 32
ERROR MESSAGES 34
SPECIFICATIONS 35
TROUBLESHOOTING 36

©Transcell Technology, Inc. All rights reserved.
The information contained herein is the property of Transcell Technology and is supplied without liability for errors or omissions. No part may be reproduced or used except as authorized by contract or other written permission. The copyright and the foregoing restriction on reproduction and use extend to all media in which the information may be embodied.

Contents subject to change without notice.



THIS EQUIPMENT CONTAINS NO USER SERVICEABLE COMPONENTS.

- Servicing of the equipment must only be carried out by trained and authorized personnel.
- Use only the AC adapter supplied with the scale. Other adapters may cause damage.



Routine maintenance

- Harsh abrasives, solvents, scouring cleaners and alkaline cleaning solutions should not be used, especially on the display window.
- The outside of the product may be wiped down with a clean cloth, moistened with water containing a small amount of soap.

This manual covers the following products:

Model	Display	Enclosure	Power Source
TI-700K	LCD	ABS	100-240 VAC, 50/60 Hz
TI-500 RFTM-B1	None	ABS	4-14 VDC
TI-500 RFTM-B1E	None	ABS	4-14 VDC

BASIC OPERATION

Getting Started – Cabled Systems

1. Press and hold the ON key until the digital indicator beeps and starts to boot up.
   After a brief initialization period, the scale will revert to a zero (“0”) weight display.

Your scale is now ready for operation!

Getting Started – Wireless Systems

1. Switch on the TI-500 RFTM weighing module(s) by pressing the BLUE button once. The blue LED will turn solid for a few seconds and then start to flash.
2. Next press and hold the ON key on the digital indicator unit for two seconds.
   After a brief initialization period, the scale will revert to a zero (“0”) weight display.

Your wireless scale is now ready for operation!

Operation – TI-700K

Before weighing it is necessary to check if the scale is unloaded and indicating zero weight in the desired unit of measure, for example lb for pounds.

If the indicator is not displaying the desired unit of measure, press the UNITS key a few times until it is indicated, e.g., lb for pounds, kg for kilograms, etc.

The indicator features an automatic zero correction meaning that small deviations will be zeroed automatically. If the indicator does not automatically determine the zero point, please press the ZERO key once briefly.

Operation – TI-500 RFTM

The TI-500 RFTM contains two buttons and one LED.

- The BLUE button is used to power up the RF weighing module.
- The RED button is used to immediately power down the RF weighing module.

The TI-500 RFTM has several operating modes to save battery life and to alert the user when it’s time to replace the batteries. You can determine the operating mode by observing the blinking behavior of the blue LED:

LED Functionality – Blinking interval		
During Power-up (Initialization)	ON for 5 seconds	
FULL BATTERY	Blink interval	
Working Mode	1.5 seconds	
Sleep Mode (power savings)	4 seconds	
LOW BATTERY	Blink interval	
Working Mode	10 seconds	Double Flash
Sleep Mode	10 seconds	Double Flash

Please replace the batteries when the blink interval is 10 seconds!

NOTE 1: TI-500 RFTM will shut down completely within two hours of a lost connection with the indicator.
NOTE: 2: TI-500 RFTM will only enter sleep mode when the TI-700K indicator is OFF.

When shipped from the factory, the TI-700K digital indicator is configured to automatically switch off after 5 minutes if not in use.

Replacing the batteries – TI-500 RFTM

An optional cylindrical battery holder is available which requires 4 “C” cell alkaline batteries.

1. Turn the TI-500 RFTM OFF (Press the RED button)
2. Locate the metal battery cylinder.
3. Unscrew either end cap to reveal batteries.
4. Exchange the batteries – be careful to note polarity.
5. Replace the end cap.
6. Re-install the metal battery cylinder.

Optional Rechargeable battery information – TI-700K

The TI-700K may contain a rechargeable battery pack which is internal to the unit. The battery chemistry is lithium-ion. Before using the indicator for the first time, please charge the battery.

HOW TO CHARGE THE INTERNAL BATTERY

The TI-700K with rechargeable battery ships with a pre-installed battery charger connector and an external battery charger. Simply link the two up and plug the external battery charger into a suitable AC wall outlet.

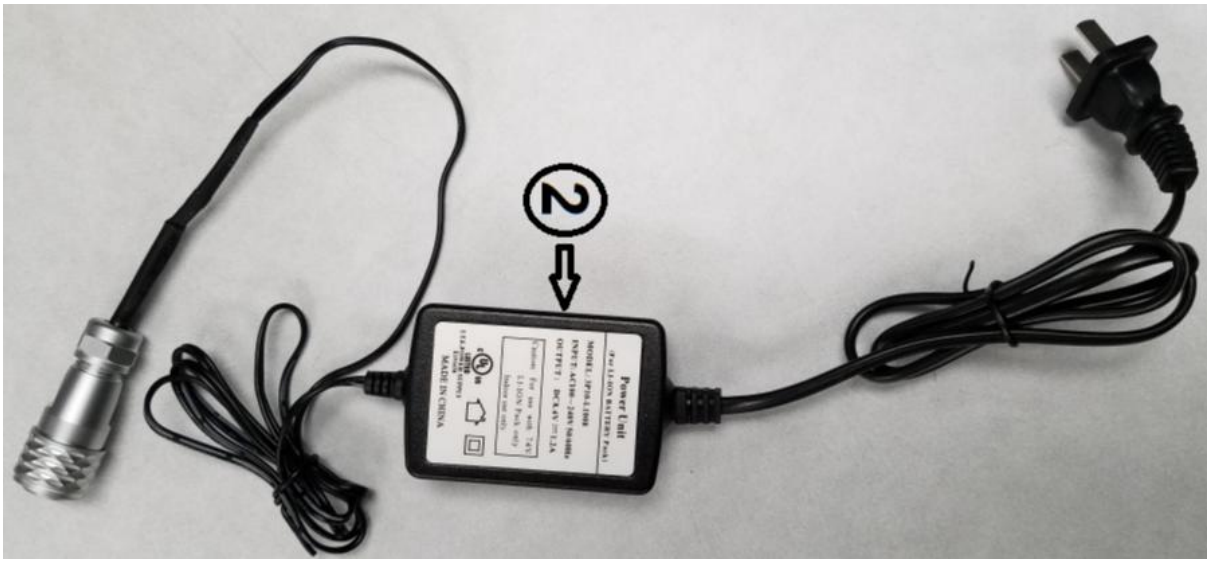

External Battery Charger

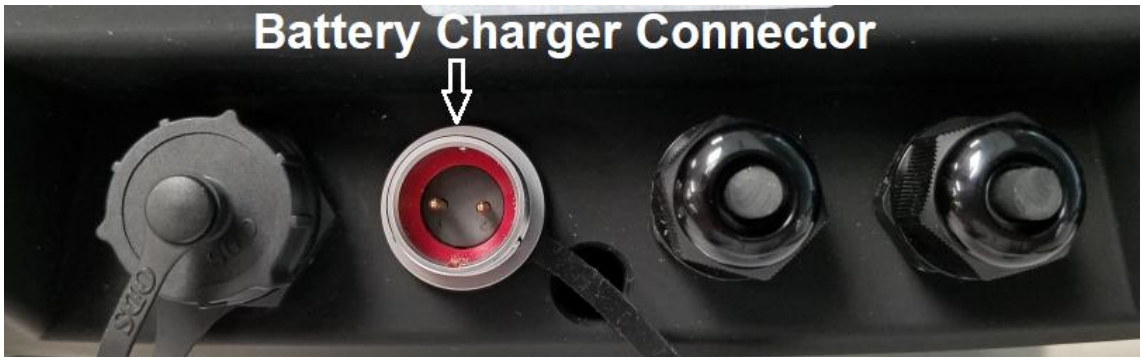

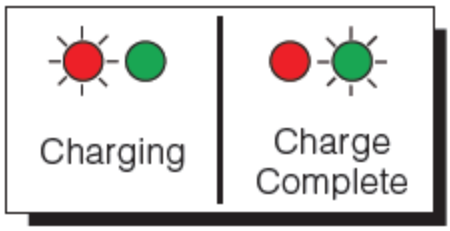

To prolong battery life, disconnect the external battery charger from the unit when charging is complete (Green LED).

Caution: the external battery charger is rated for IP54 only and exposure to water may void the warranty. Be sure to remove the battery charger from the indicator and apply the cap to the battery charger connector before washing it down.

The indicator's battery should operate for about 85 hours if left on continuously. The display unit is configured to power down after 5 minutes of inactivity, but this parameter can be changed through the A1-10 menu setting.

The battery can be charged while ON or OFF and the indicator can be operated while it's charging unless the state of charge is very low.

WHEN TO CHARGE THE INTERNAL BATTERY

The best time to charge the Lithium-Ion battery is any time the indicator is not in use. You need not wait for the Low Battery Indication – in fact it's best that you don't.

When the battery has been discharged below 30%, the Low Battery Indication will start blinking in the lower left-hand corner of the display. The indicator may be used for an additional 2 minutes before it automatically powers down. ***When the system reaches this state, it is imperative that you charge the battery to avoid permanent damage.***

DISPLAY & KEYPAD DETAILS

This model utilizes a 7-digit LCD (Liquid Crystal Display) with adjustable LED backlight.

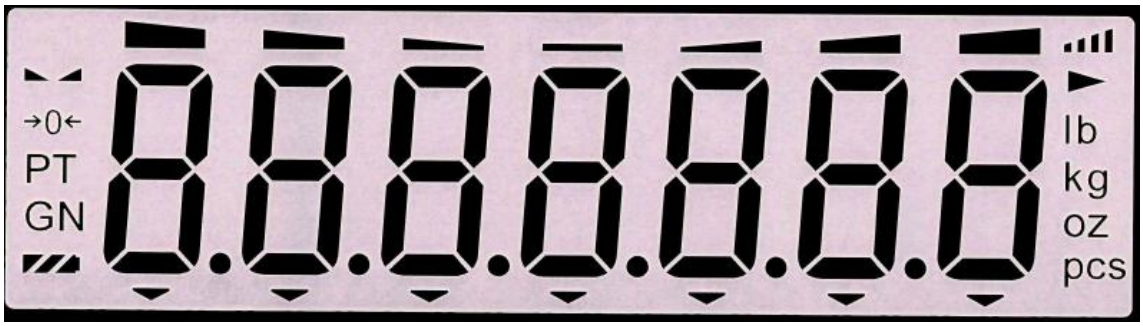

Symbol	Display Indication
→0←	Displays when the reading is at “Center of Zero”.
N	The indicator is in Net Weight mode.
G	The indicator is in Gross Weight mode.
T	A tare weight has been established in the system.
P	The indicator is in PEAK HOLD mode
lb	The displayed weight reading is in pounds (lb).
kg	The displayed weight reading is in kilograms (kg).
g	The displayed weight reading is in grams (g).
oz	The displayed weight reading is in ounces (oz).
pcs	The displayed reading is in pieces (piece counting).
	Displays whenever the indicator reading is at rest, i.e., not in motion.
	Indicates approximate battery charge remaining. When blinking, the battery needs to be re-charged or replaced soon.
	Indicates wireless signal strength (if so equipped)

You can order two separate display types:

1. Normal: Segments are black, and the backlight color is adjustable
2. Reverse: Backlight is black, and the color of the Segments is adjustable

The default color is green for both types



Normal Display



Reverse Display

The capacitive touch keypad is composed of a total of seven (7) function keys.

Key	Keypad Function
MENU OFF	Provides access to the Configuration menu. **Press and hold to shut the unit OFF, then press the NET/GROSS key while "oFF?" is displayed.** **Configuration Menu**: exits the Configuration Menu (Top/Parameter levels only)
UNITS	**Normal operating mode**: Cycles displayed weight indication among pounds (lb), kilograms (kg), grams (g) and ounces (oz). If your scale system has been configured to display pound-ounces (lb-oz), this key will not function. This key can be disabled. **Configuration Menu**: up arrow navigation.
ZERO	**Normal operating mode**: Zeroes the weight display reading, provided certain conditions are met. **Configuration Menu**: down arrow navigation.
NET GROSS	**Normal operating mode**: Selects the weighing mode, i.e., Gross weight or Net Weight. **Configuration Menu**: saves the setting (SET).
TARE	**Normal operating mode**: Establishes a system Tare, provided certain conditions are met. If a tare weight has already been established, cancels the current tare weight. **Configuration Menu**: left arrow navigation.
PRINT	**Normal operating mode**: Sends the displayed weight reading to the serial communication port, provided certain conditions are met. **Configuration Menu**: right arrow navigation.
ON	Press and hold for 2-3 seconds to turn the indicator ON.

Conditional keypad functions:

TARE
Indicator reading must not be in motion or displaying an error message. Gross weight must be greater than zero.

ZERO
Indicator reading must not be in motion or displaying an error message. Operation may be restricted by the Zero Reset Range setting (see F4 menu parameter).

PRINT
Indicator reading must not be in motion or displaying an error message.

INSTALLATION & OVERVIEW

Remember that the installer is ultimately responsible to assure that an installation will be and remain safe and operable under the specific conditions encountered.

The indicator must be properly configured and calibrated prior to use.

Scope of TI-700K

Out of the box, the TI-700K indicator operates as a basic, cabled digital weight indicator. The load cell(s) and/or j-box is connected to the indicator's internal A/D converter. This configuration is depicted in the following diagram:

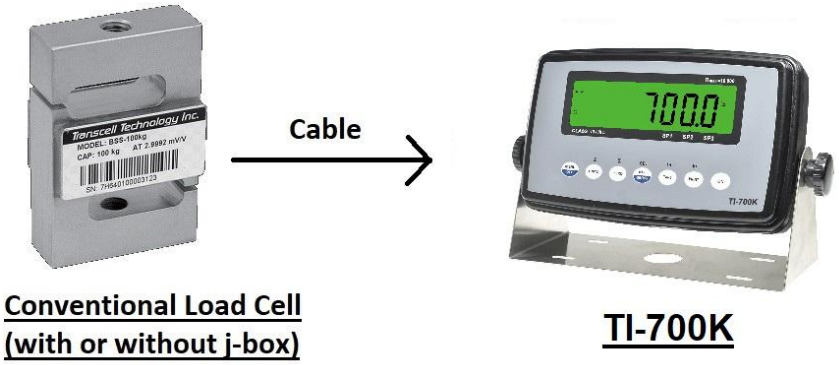

When sold as part of a Smarter Weigh™ RF Kit, your TI-700K indicator is transformed from "wired" to cable-free, as depicted in the following diagram:



Our products currently use reliable and popular Bluetooth® wireless technology.

Installation of TI-700K digital indicator

Find a suitable location for the indicator and use the included bracket to mount the unit to a wall or table. Use this handy guide for mounting the bracket to a wall or table:

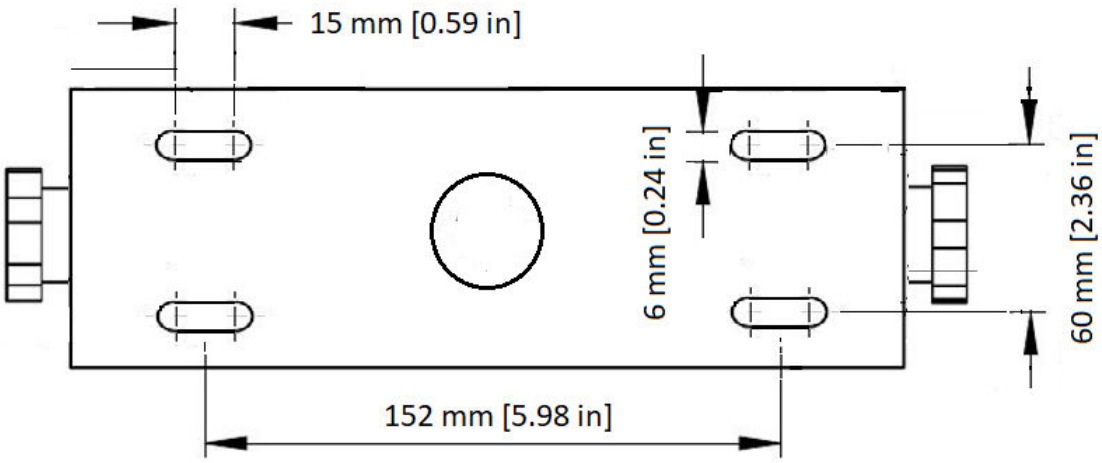

CONNECTIONS

The rear cover must first be removed to make the appropriate connections to the weigh platform, etc. To remove the rear cover, simply remove the screws that secure it to the enclosure and set aside.

Caution! Disconnect power source from indicator prior to removing rear cover.

Caution! Disconnect leads from rechargeable battery (if installed) to avoid shorts!

Load Cell Connections

Connect your shielded load cell cable to load cell terminal block using the table below. Use F11 to configure the unit for either 4-wire or 6-wire load cells.

Load Cell Terminal Block (J1)

Marking	Function		Marking	Function
GND	Shield		S-	- Signal
E+	+ Excitation		SE-	- Sense
SE+	+ Sense		E-	- Excitation
S+	+ Signal			

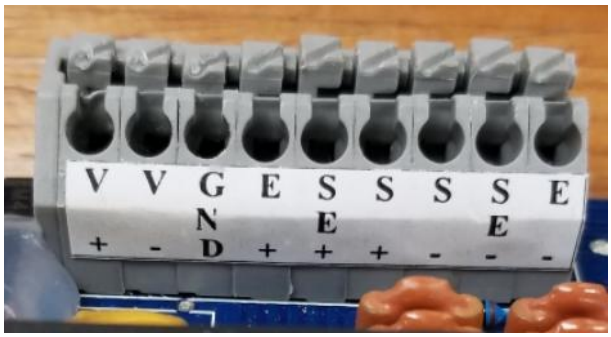

Load Cell Terminal Block

V+ and V– are the DC power connections to the board: On some units, the load cell shield connection (GND) is separate from load cell terminal block:

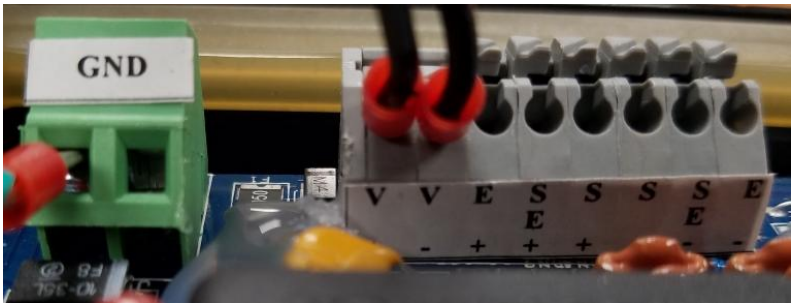

RS-232 Connections (COM1)

The indicator ships with a “piggyback” RS-232 communication board plugged into socket U9. Configure using the User/COM1 (“A1”) menu.

Connect your RS-232 serial cable to the “piggyback” board using the table below.

COM1 /RS-232 Terminal Block (J6)

Pin No.	Function
1	Receive Data
2	Transmit Data
3	Signal Ground



Power Connections (AC version)

The TI-700K indicator ships with a pre-installed AC line cord. It has been pre-wired to Terminal Block J1 at the factory. Simply plug the unit into a standard wall outlet.

Power Connections (Optional Rechargeable Battery version)

The TI-700K with rechargeable battery ships with a pre-installed battery charger connector and an external battery charger. Simply link the two up and plug the external battery charger into a suitable AC wall outlet.

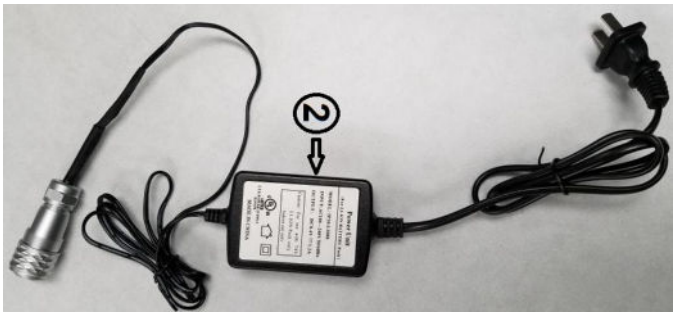

External Battery Charger

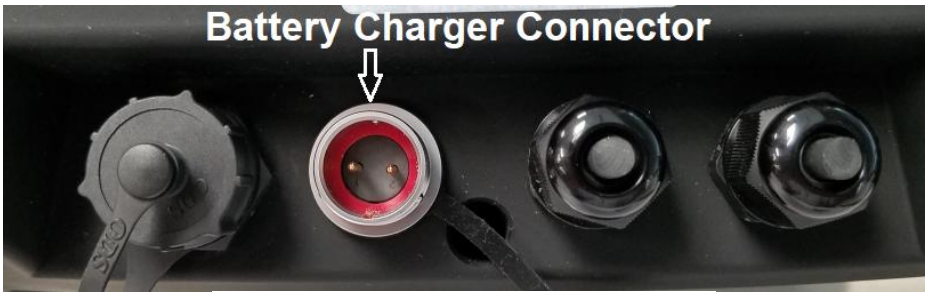

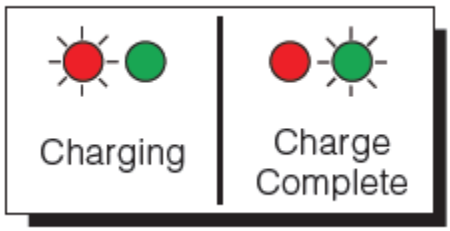

To prolong battery life, disconnect the external battery charger from the unit when charging is complete (Green LED).

Caution: the external battery charger is rated for IP54 only and exposure to water may void the warranty. Be sure to remove the battery charger from the indicator and apply the cap to the battery charger connector before washing it down.

External USB 2.0 Port (COM2)

The indicator ships with an external USB 2.0 port. Connect a standard USB 2.0 cable between the indicator and your computer. Configure using the User/COM2 (“A2”) menu.

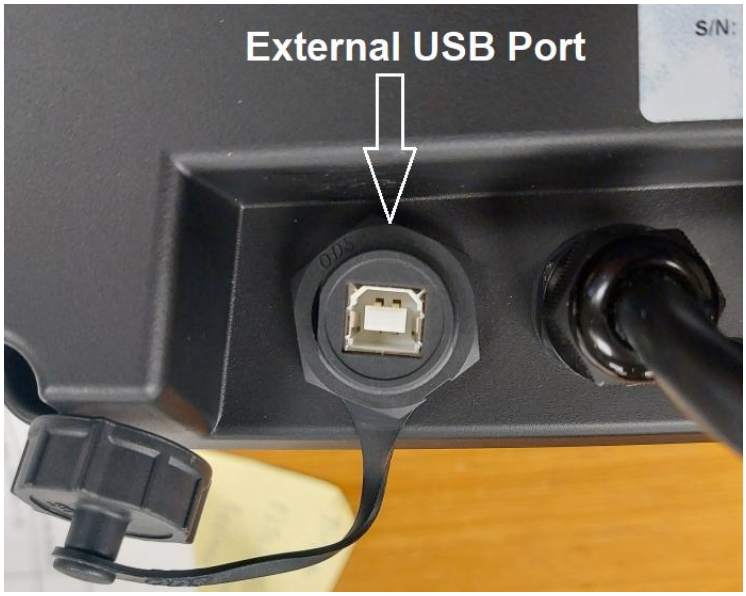

This USB port requires installation of a driver on your computer.
https://www.silabs.com/developers/usb-to-uart-bridge-vcp-drivers

The USB port can also be used to update the indicator’s firmware. Consult factory for use.

Installation of TI-500 RFTM remote wireless A/D Module

Physical installation

The remote wireless A/D module is designed to fit into a pre-defined opening:

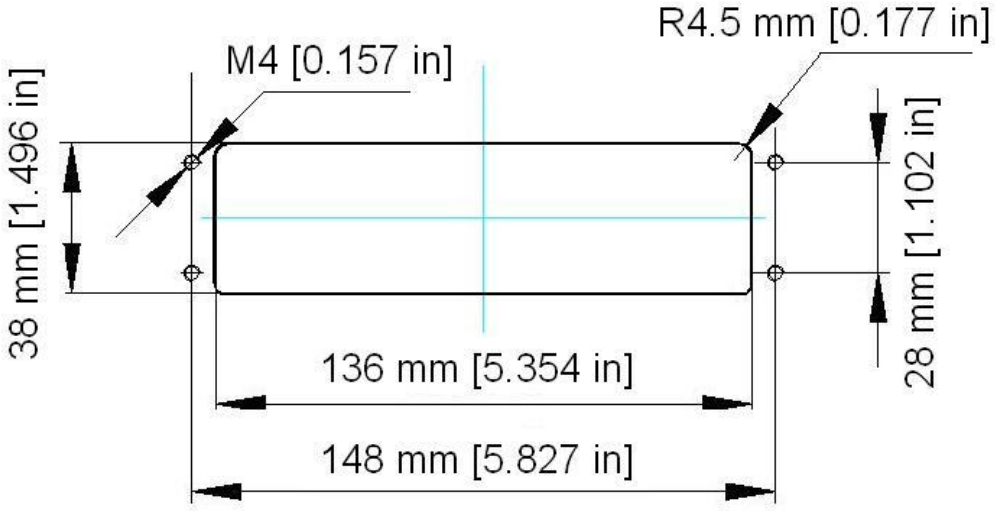

An optional mounting bracket is also available.

Electrical Connections

The TI-500 RFTM module requires an external 6VDC power supply. Single channel units require about 60 mA of current to drive four 350-ohm load cells (20 mA plus 10 mA per load cell). Dual channel units require about 100 mA of current to drive eight 350-ohm load cells.

The TI-500 RFTM module will operate normally down to approximately 4 VDC whereupon it will indicate a low battery condition.

The power leads are pre-wired to the inside of the TI-500 RFTM. The red lead goes to the positive DC terminal while the black lead goes to the negative DC terminal.

The TI-500 RFTM module also has at least one load cell input terminal or wiring harness. Each terminal or harness can drive up to four 350-ohm load cells. The terminals are spring loaded; to open, use a small screwdriver to press down on the orange tab. The harnesses should be spliced into the load cell or j-box using the supplied butt splices.

Load Cell Input Terminal

Marking	Wire Name		Marking	Wire Name
S-	- Signal		E-	- Excitation
S+	+ Signal		E+	+ Excitation

NOTE: On dual RF A/D modules, each load cell terminal is marked 1-4, e.g., L/C3.

Load Cell Input Harness

Wire Color	Wire Name		Wire Color	Wire Name
White	- Signal		Black	- Excitation
Green	+ Signal		Red	+ Excitation

INDICATOR CONFIGURATION

Configuration Menus

The TI-700K contains three (3) menus to configure the indicator:

Setup (“F”) Menu **–** Configures all scale-related parameters including calibration procedures.

User1 (“A1”) Menu **–** Configures COM1 communication parameters and other misc. parameters, e.g., automatic turn off, etc.

User2 (“A2”) Menu **–** Configures COM2 communication parameters.

The configuration menus are laid out in the following vertical arrangements:

- Top / Parameter levels
- Selection level (or function level, e.g., span calibration)

Please review the following chart to get a feel for how to navigate among the various menus and parameters.

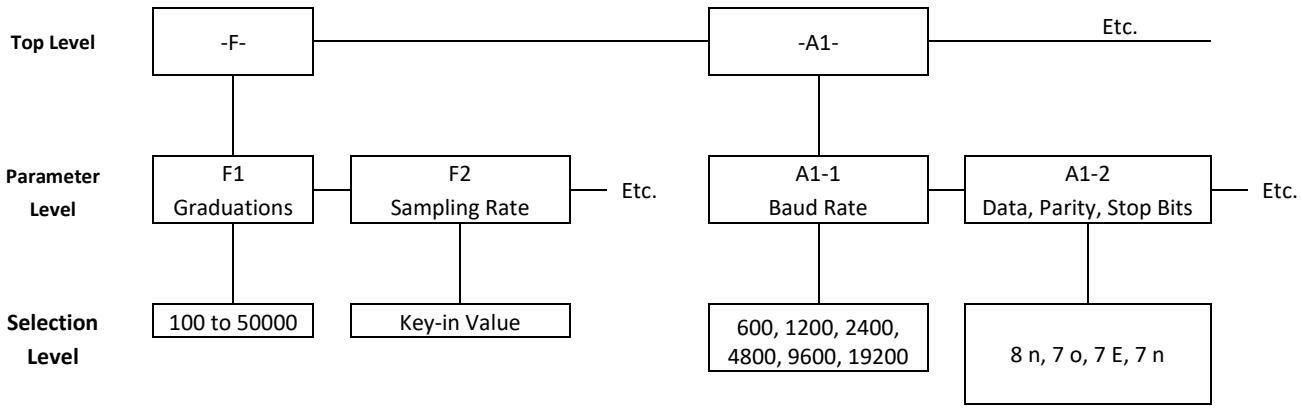

Entering the Setup ("F") Configuration Menu

To access this menu, please follow these directions:

1. Press and hold the MENU/OFF key to switch off the digital indicator.
2. Press and hold the ON key until the digital indicator beeps and starts to boot up.
3. WAIT until the countdown phase begins ("55.5.5.5.5.5") and then press and hold the MENU/OFF key. This action freezes the countdown for a few seconds and then "Set?" is displayed.
4. While "Set?" is displayed press the NET/GROSS button. The digital indicator displays "- F – ".
5. Scroll down using the ZERO (down) key to reach the parameter level. The scale shows "F 1".
6. Move from one "F" menu parameter to the next by using the TARE (left) or PRINT (right) keys. For example, to go from F1 to F2, press the PRINT key. To go from F2 back to F1, press the TARE key.
7. Once you have arrived at the proper "F" menu parameter, e.g., "F1", press the ZERO (down) key once to arrive at the selection level. The scale displays the current parameter setting.
8. If there is a selection list, scroll through the available parameter settings, use the TARE (left) or PRINT (right) keys. Otherwise, use the arrow keys to adjust the displayed value to the new value.
9. Once the setting you want is displayed on the screen, press the NET/GROSS (set) key to save this value and revert up to the parameter level, e.g.," F1".
10. Press the MENU/OFF key once to exit configuration mode and return to normal operating mode.

NOTE: If a "CAL-Err" message is encountered, the parameter changes are not saved. To allow changes, open the unit and shunt the JP1 header block.

Setup ("F") Menu Descriptions

This section provides more detailed descriptions of the selections found in the Setup Menu Chart. Factory-set defaults are shown in **bold** with a checkmark; **(√)**.

CODE/NAME	DESCRIPTION	SELECTION LIST
F1 Graduations	Sets the number of full-scale graduations, i.e., max capacity ÷ display division (d). Pressing the **ZERO** key to scroll down one level begins the sequence.	Key-in 100 - 100000 **10000** √
F2 Sampling Rate	Sets the sampling rate in Hertz (measurements per second). **NOTE 1:** This menu is not applicable to wireless systems. **NOTE 2:** H2 = Hertz (Hz)	10, 20, 30, 50, 60, 80, 120, 150, 240, 400, 600, 1200 **20 H2** √
F3 Zero Track Band	Selects the range within which the scale will automatically zero. Selections are in display divisions per second (d/s).	0 (Off) **0.5** √ 1 3 5
F4 Zero Range	Selects the range within which the scale may be zeroed. Selections are expressed as a percentage of full-scale capacity.	**100** √ 1.9 2 20
F5 Motion Band	Selects the level at which motion is detected. Selections are expressed as display divisions per second (d/s). Pressing the **ZERO** key to scroll down one level begins the sequence	Key-in 0.0 – 32.0 **00001.0** √
F6 Digital Filter	Averages weight readings to produce higher stability. Choose the speed that works best for your application. "AUto" = Automatic, FIr = FIR (finite impulse response), "Avg-xx" = Averaging Filter	**Auto** √ FIr 01, 04, 08, 16, 24, 32, 40, 48, 56, 64
F7 Overload Limit	Selects the desired formula which determines the point at which the indicator shows the overload message. All selections are based on the primary unit selected in F8. "FS" = Full scale capacity.	FS **FS + 2%** √ FS + 5% FS + 1d FS + 9d
F8 Calib. Unit	Selects the primary base unit to be used in the calibration process and the default unit for normal operation. "1" = primary unit is lb "2" = primary unit is in kg	**1** √ 2
F9 Display Divisions	Sets the interval value. Use together with F10.	**1** √ 2 5
F10 Decimal Point	Sets the decimal point value. Use together with F9.	**0** √ 00 0.0000 0.000 0.00 0.0

CODE/NAME	DESCRIPTION	SELECTION LIST
F11 No. of L/C wires	Selects the number of wires in the load cell / homerun cable. Cabled systems only. "4" = four wires "6" = six wires (SENSE)	**4** √ 6
F12 Enable lb-oz display	Allows you to enable or disable lb-oz display. "1" = lb-oz is enabled "0" = lb-oz is disabled	**0** √ 1
F14 Power-on zero (IZSM)	Allows you to enable or disable power-on zero. (IZSM); maximum value is 20% of FS. "1" = IZSM is enabled "0" = IZSM is disabled	**0** √ 1
F15 Third unit selection	Allows you to select a third unit of measure. "0" = third unit disabled "1" = grams (g) "2" = ounces (oz)	**0** √ 1 2
F16 Zero Calibration	Places indicator into live zero-calibration mode. Scrolling down with the ZERO key one level begins the procedure.	Press **ZERO** key to begin sequence
F17 Span Calibration	Places indicator into live span calibration mode. Scrolling down with the ZERO key one level begins the procedure.	Press **ZERO** key to begin sequence
F18 View Calibration	Actuates the function that allows you to view both the zero and span calibration value. Scrolling down with the **ZERO** key one level begins the procedure.	Press **ZERO** key to begin sequence
F19 Key-in Zero	Allows you to key-in known zero calibration value. Scrolling down with the **ZERO** key one level begins the procedure.	Press **ZERO** key to begin sequence
F20 Key-in Span	Allows you to key-in a known span calibration value. Scrolling down with the **ZERO** key one level begins the procedure.	Press **ZERO** key to begin sequence
F21 Factory Reset	Parameters **F21-1** to **F21-3** are used to reset the indicator to Factory settings.	
F21-1 Factory Reset	This sub-menu will reset all parameters in the “F” and “A” menu to the default settings. It will not overwrite any previously saved calibration data. **USE WITH CAUTION**!	Press the **ZERO** key twice to execute
F21-2 Factory Reset	This sub-menu is for FACTORY USE ONLY	
F21-3 Factory Reset	This sub-menu is for FACTORY USE ONLY	

CODE/NAME	DESCRIPTION	SELECTION LIST
F23 Fine Tune 4-20 mA	Fine-tune the optional analog output board. Pressing the **ZERO** key to scroll down one level begins the sequence.	Press the **ZERO** key to begin sequence
F24 Analog Output Function	Selects the function of the optional active analog output. "oFF" = Off "4-20 nnA " = 4-20 mA "0–10u " = 0–10V	**oFF** √ 4-20 nnA 0–10u
F25 Set Point Function	Selects the number and function of the set points and relay outputs.	0 to 10 **0** √
F26 Multi-interval segments	Selects the number of weighing segments for multi-interval scale configuration. "0" = multi-interval is disabled	**0** √ 1 2
F27 No. of Scale Divisions (WS1)	Selects the number of scale divisions (n) to be used for Weighing Segment 1 (WS1). Scrolling down with the **ZERO** key one level begins the procedure.	Key-in 100 - 50000 **001000** √
F28 No. of Scale Divisions (WS2)	Selects the number of scale divisions (n) to be used for Weighing Segment 2 (WS2). Scrolling down with the **ZERO** key one level begins the procedure.	Key-in 100 - 50000 **005000** √
F29 Load Cell Input	Selects the load cell input source. “AdC” = Internal A/D (cabled), “1rAdIo” = One external wireless A/D module,	**AdC** √ 1rAdIo
F30 Special Application	Enable a special application function. “0” = None (Gross/Net)”, “1” = Accumulation, “2” = Remote Display, “3” = Piece Count, “5” = Hold, “6” = Checkweigher	**0** √ 1 2 3 5 6
F31 Gross Zero Band	Selects the range within which the scale will automatically clear the tare and switch to Gross mode. Note that the scale must be at a standstill. Selections are in display divisions (d). Scrolling down with the **ZERO** key one level begins the procedure. “0” = Disabled	Key-in 0 - 10 **000000** √
F32 Center of Zero Band	Selects the range around gross zero within which the scale will display the Center of Zero annunciator. Selections are in display divisions (d).	**0.25** √ 0.5
F34 Auto Print Min. Weight	Selects the minimum weight at which the auto print function will work if enabled. Selections are in display divisions (d). Scrolling down with the **ZERO** key one level begins the procedure. “0” = Disabled	Key-in 0 - 100 **000001** √

CODE/NAME	DESCRIPTION	SELECTION LIST
F35 Hold Mode	Selects the specific Hold Mode. F30 must be set to “5”. "0" = Off "1" = Automatic Hold "2" = Manual Hold "3" = Peak Hold	**0** √ 1 2 3
F36 Percentage Hold Weight	Selects the percentage (of the displayed held value) of weight change before the scale automatically unlocks the held weight and relocks onto the new weight. Use together with F35.	Key-in 0 – 100 % **000010** √
F37 Min. Hold Weight	Sets the minimum weight that can be captured and held; expressed in display divisions (d). Use together with F35.	1, 2, **5** √ , 10, 20, 50, 100, 200, 500, 1000
F50 FIR Filter	Parameters **F50-1** to **F50-7** are used to configure the FIR (finite impulse response) filter.	
F50-1 FIR Window	Sets the Window Function of the FIR filter. “HAnnInG” = Hanning (Hann), “HA InG” = Hamming, “bIAC_” = Blackman	**HAnnInG** √ HA InG bIAC_
F50-2 FIR Type	Sets the FIR filter type. Choose this one first. “LPASS” = Low Pass, “HPASS” = High Pass, “bdPASS” = Band Pass	**LPASS** √ HPASS bdPASS
F50-3 FIR No. of Taps	Selects the number of taps (filter depth) of the FIR filter. The larger the number, the slower the response.	Key-in 1 - 99 **000029** √
F50-4 FIR Cutoff Frequency	Sets the cutoff frequency for both Low Pass and High Pass FIR types. Value must be less than or equal to one-half the F2 (sampling rate) setting.	Key-in 1 – F2 ÷ 2 **000005** √
F50-5 FIR Lower Cutoff Frequency	Sets the lower cutoff frequency for the Band Pass FIR type. Value must be less than or equal to one-half the F2 (sampling rate) setting.	Key-in 1 – F2 ÷ 2 **000001** √
F50-6 FIR Upper Cutoff Frequency	Sets the upper cutoff frequency for the Band Pass FIR type. Value must be greater than F45 setting.	Key-in 1 – F2 ÷ 2 **000002** √
F50-7 Post FIR Filter	Sets the post-FIR averaging filter. “0” = Disabled	0 1 2 **3** √
F51 Auto Digital Filter	Parameters **F51-1** to **F51-4** are used to configure the Automatic digital filter. (F6 = AUto)	
F51-1 Max	Configures the maximum number of readings to be averaged. Choose the setting that works best for your application.	**32** √ , 64, 80, 96, 128
F51-2 Min	Configures the minimum number of readings to be averaged. Choose the setting that works best for your application.	**1** √ , 8, 16, 24, 32

CODE/NAME	DESCRIPTION	SELECTION LIST
F51-3 Primary Band	Configures the primary band, expressed in A/D counts. Choose the setting that works best for your application.	**500** √ , 1000, 2000, 3000, 4000, 5000, 6000, 7000
F51-4 Secondary Band	Configures the secondary band, expressed in A/D counts. Choose the setting that works best for your application.	**0** √ , 10, 20, 50, 100, 150, 200, 250, 300
F52 mV/V Calibration	Parameters **F52-1** to **F52-6** are used to configure the mV/V calibration feature.	
F52-1 mV/V Calibration Enable	Enables the mV/V calibration feature. "0" = Disabled	**0** √ 1
F52-2 Load Cell Rated Capacity Unit	Selects unit of rated capacity of the load cell(s) used in the scale system. "1" = pounds (lb) "2" = kilograms (kg)	1 **2** √
F52-3 Load Cell Rated Capacity	Selects rated capacity of the load cell(s) used in the scale system. Scrolling down with the **ZERO** key one level begins the procedure.	Key-in 100 – 100 000 **10 000** √
F52-4 No. of Load Cells	Selects the number of load cell(s) used in the scale system.	1, 2, 3, **4** √
F52-5 Load Cell Output at Rated Capacity	Selects the output at rated capacity of the load cell(s) used in the scale system Units are mV/V.	Key-in 0.2000 – 3.0000 **02.0000** √
F52-6 View Span Calibration Value	Allows you to view the calculated span calibration value in ADC counts. Scrolling down with the **ZERO** key one level begins the procedure.	Press **ZERO** key to begin sequence

Entering the User/COM1 (“A1”) Menu

1. Press and hold the MENU/OFF key to switch off the digital indicator.
2. Press and hold the ON key until the digital indicator beeps and starts to boot up.
3. WAIT until the countdown phase begins (“55.5.5.5.5.5”) and then press and hold the MENU/OFF key. This action freezes the countdown for a few seconds and then “Set?” is displayed.
4. While “Set?” is displayed press the NET/GROSS button. The digital indicator displays “- F – ".
5. Press the PRINT (right) key once. The screen displays “-A1-”.
6. Scroll down using the ZERO (down) key to reach the parameter level. The digital indicator shows “A1-1”.

7. Move from one “A1” parameter to the next by using the TARE (left) or PRINT (right) keys. For example, to go from A1-1 to A1-2, press the PRINT key. To go from A1-2 back to A1-1, press the TARE key.
8. Once you have arrived at the proper “A1” menu parameter, e.g., “A1-1”, press the ZERO (down) key once to arrive at the selection level. The scale displays the current parameter setting.
9. If there is a selection list, scroll through the available parameter settings, use the TARE (left) or PRINT (right) keys. Otherwise, use the arrow keys to adjust the displayed value to the new value.
10. Once the setting you want is displayed on the screen, press the NET/GROSS (set) key to save this value and revert up to the parameter level, e.g.,” A1-1”.
11. Press the MENU/OFF key once to exit configuration mode and return to normal operating mode.

User/COM1 (“A1”) Menu Descriptions

This section provides more detailed descriptions of the selections found in the User Menu Chart. Factory-set defaults are shown in **bold** with a checkmark; **(√)**.

CODE/NAME	DESCRIPTION	SELECTION LIST
A1-1 Baud Rate	Selects the baud rate for data transmission through the serial port.	1200, 2400, 4800, **9600** √, 19200, 38400, 57600, 115200
A1-2 Data Bits, Parity and Stop Bits	Selects the number of data bits and parity of serial transmission. "8 n" = 8 data bits with no parity bit and one stop bit "7 o" = 7 data bits with odd parity bit and one stop bit "7 E" = 7 data bits with even parity bit and one stop bit "7 n" = 7 data bits with no parity bit and two stop bits	**8 n** √ 7 o 7 E 7 n
A1-3 Serial (COM1) Port Mode	Selects the mode of the serial (COM1) port: Refer to Serial Port Information for more information. "0" = Demand Full Duplex "1" = Continuous Full Duplex “2” = Auto Print “4” = Test and Measurement	**0** √ 1 2 4
A1-4 MP-20 Print Header	Tells MP-20 printer to print the header information. Valid only when **A1-6** is set to “2” or “4”. "0" = Do NOT Print Header "1" = Print Header	**0** √ 1
A1-5 Units Key	Selects the function of the Units key. "0" = Disabled "1" = Enabled	0 **1** √

CODE/NAME	DESCRIPTION	SELECTION LIST
A1-6 Serial (COM1) Port Output String	Selects the output string of the serial (COM1) port: Refer to Serial Port Information for more details. "0" = Condec Demand, "1" = Condec Continuous "2" = Text Print Ticket (MP-20) “3” = Text Print Ticket with Auto Label Feed (MP-20) "4" = 9L.BAS = 9 lines, Label "5" = 9P.BAS = 9 lines, Paper (Default) "6" = 6LB/9LB.BAS = 6 or 9 lines, Label, Barcode "7" = 6PB/9PB.BAS = 6 or 9 lines, Paper, Barcode "8" = 1P.BAS = 1 line, Paper "9" = 1PB.BAS = 1 line, Paper, Barcode "10 = CUSTOM.BAS	0 1 2 3 4 **5** √ 6 7 8 9 10
A1-7 ID Number	Selects the ID number mode. "0" = Disabled "1" = Enabled	**0** √ 1
A1-8 Set ID Number	Key-in a fixed ID number (used for printouts). Pressing the **ZERO** key to scroll down one level begins the sequence.	Key-in 0 to 999999 **123456** √
A1-9 Line Feeds	Key-in the number of line feeds (used for printouts). Pressing the **ZERO** key to scroll down one level begins the sequence.	Key-in 0 to 99 **000008** √
A1-10 Auto Power Off	Configure the automatic power off time for the indicator. Expressed in minutes of inactivity (keys and weighing platform). Pressing the **ZERO** key to scroll down one level begins the sequence. "0" = **always on**	Key-in 0 to 30 **000000** √
A1-11 Backlight Behavior	Configure the behavior of the display backlight. "oFF" = Always off "on" = Always on “AUto” = Automatic operation	oFF **on** √ AUto
A1-12 Display Color	Parameters **A1-12-1** and **A1-12-2** are used to configure the color of the display.	
A1-12-1 Normal Mode	Selects the color of the display in normal operating mode. “1” = Green, “2” = Blue, “3” = R + G + B, “4” = R + G, “5” = R + B, “6” = G + B, “7” = Red	**1** √ 2 3 4 5 6 7
A1-12-2 Hold Mode	Selects the color of the display when the weight reading is locked onto the screen in Hold mode. “1” = Green, “2” = Blue, “3” = R + G + B, “4” = R + G, “5” = R + B, “6” = G + B, “7” = Red	1 2 **3** √ 4 5 6 7
A1-13 Handshaking	Selects the function of the hardware handshaking. (NOTE: Receive pin is used for handshaking). "0" = Disabled "1" = Enabled	**0** √ 1

CODE/NAME	DESCRIPTION	SELECTION LIST
A1-18 Date & Time Print	Selects the function of the printed date and time. "0" = Disabled "1" = Enabled	**0** √ 1
A1-20 Set System Time & Date	Set the system time and date. Pressing the **ZERO** key to scroll down one level begins the sequence.	Press **ZERO** key to begin sequence
A1-23 Audible Key Feedback	Selects the function of the audible key feedback (beeper). "0" = Disabled "1" = Enabled	0 **1** √
A1-24 Diagnostics	Used to access the listed test functions (one at a time). Pressing the **ZERO** key begins the sequence. "A1-24-1" = Display segment test, "A1-24-2" = A/D converter test, "A1-24-5" = Serial Port test (both), "A1-24-6" = Keyboard test	Press **ZERO** key to begin sequence
A1-25 Output Logic	Use this menu to assign the active logic level to each of the optional digital output terminals (OUT1 through OUT3). "0" = Low logic, "1" =High logic	0 **1** √
A1-26 Low Battery Detection	Parameters **A1-26-1** to **A1-26-5** are used to configure the low battery detection properties of the indicator.	
A1-26-1 Mode	Select low battery detection mode. Should be disabled for AC powered units. "0" = Disabled "1" = Enabled	**0** √ 1
A1-26-2 No. of Batteries	Selects the number of rechargeable batteries. "b2 – 7.4" = 3.7V x 2 batteries (7.4V) "b4 – 14.8" = 3.7V x 4 batteries (14.8V)	**b2 – 7.4** √ b4 – 14.8
A1-26-3 Battery Count - Read	Allows you to read the battery count. Pressing the **ZERO** key to scroll down one level begins the sequence.	Press **ZERO** key to begin sequence
A1-26-4 Battery Count - Edit	Allows you to edit the battery count. Pressing the **ZERO** key to scroll down one level begins the sequence.	Press **ZERO** key to begin sequence
A1-26-5 Battery Count - Reset	Allows you to reset the battery count. Pressing the **ZERO** key to scroll down one level begins the sequence.	Press **ZERO** key to begin sequence

Setting system time and date (A1-20)

The system time is displayed and set in military (24-hr) format or hh.mm.ss. For example, 09.00.00 is 9:00 AM and 17.00.00 is 5:00 PM.

The system date is displayed and set in month/day/year format or mm.dd.yy. For example, 01.07.20 is January 7, 2020, and 11.30.20 is November 30, 2020.

1. While in the User ("A") Menu, scroll to "**A1-20**", and then scroll down once using the ZERO (down) key. The screen displays the current system time.
2. ***If the indicator is displaying the correct time, simply press the UNITS key to move to system date. Jump ahead to Step #6.***
3. Otherwise, press the NET/GROSS key to reset the display to zeroes (00.00.00).
4. Use the four directional keys to adjust the displayed value to the actual system time in 24-hr format. Increase the flashing digit by pressing the UNITS (up) key. Decrease the flashing digit by pressing the ZERO (down) key. Pressing the TARE (left) key or the PRINT (right) key will change the position of the flashing digit.
5. Press the NET/GROSS key to save the value. The screen briefly displays "SEt", followed by current system date.
6. ***If the indicator is displaying the correct date, simply press the UNITS key to exit this menu.***
7. Otherwise, press the NET/GROSS key to reset the display to zeroes (00.00.00).
8. Use the four directional keys to adjust the displayed value to the actual system date in mm.dd.yy format. Increase the flashing digit by pressing the UNITS (up) key. Decrease the flashing digit by pressing the ZERO (down) key. Pressing the TARE (left) key or the PRINT (right) key will change the position of the flashing digit.
9. Press the NET/GROSS key to save the value and revert up to the parameter level, i.e. "A1-20".

Diagnostics (A1-24)

Here is a brief description of each diagnostic test:

A1-24-1 Display Test – Lights up all display segments. End test manually by pressing the NET/GROSS (Set) key.

A1-24-2 ADC Test – Shows internal A/D converter counts – useful for troubleshooting weighing issues. End test manually by pressing the NET/GROSS (Set) key. The Zero key works in this mode.

A1-24-5 Serial Test – Transmits a data string continuously out both serial ports ("TEST1" on COM1 and "TEST2" on COM2). End test manually by pressing the NET/GROSS (Set) key.

A1-24-6 Keyboard Test – Displays a keycode for each key pressed on the keypad. See Table below. End test manually by pressing the NET/GROSS (Set) key.

Key	Keycode
Units	1
Zero	2
Net/Gross	EXIT
Tare	4
Print	5

Entering the COM2 (“A2”) Menu

1. Press and hold the MENU/OFF key to switch off the digital indicator.
2. Press and hold the ON key until the digital indicator beeps and starts to boot up.
3. WAIT until the countdown phase begins (“55.5.5.5.5.5”) and then press and hold the MENU/OFF key. This action freezes the countdown for a few seconds and then “Set?” is displayed.
4. While “Set?” is displayed press the NET/GROSS button. The digital indicator displays “- F – " .
5. Press the PRINT (right) key twice. The screen displays “-A2-”.
6. Scroll down using the ZERO (down) key to reach the parameter level. The scale shows “A2-1”.
7. Move from one “A2” parameter to the next by using the TARE (left) or PRINT (right) keys. For example, to go from A2-1 to A2-2, press the PRINT key. To go from A2-2 back to A2-1, press the TARE key.
8. Once you have arrived at the proper “A2” menu parameter, e.g., “A2-1”, press the ZERO (down) key once to arrive at the selection level. The scale displays the current parameter setting.
9. If there is a selection list, scroll through the available parameter settings, use the TARE (left) or PRINT (right) keys. Otherwise, use the arrow keys to adjust the displayed value to the new value.
10. Once the setting you want is displayed on the screen, press the NET/GROSS (set) key to save this value and revert up to the parameter level, e.g., “A2-1”.
11. Press the MENU/OFF key once to exit configuration mode and return to normal operating mode.

COM2 (“A2”) Menu Descriptions

This section provides more detailed descriptions of the selections found in the User Menu Chart. Factory-set defaults are shown in **bold** with a checkmark; **(√)**.

CODE/NAME	DESCRIPTION	SELECTION LIST
A2-1 Baud Rate	Selects the baud rate for data transmission through the serial port.	1200, 2400, 4800, **9600** √, 19200, 38400, 57600, 115200
A2-2 Data Bits, Parity and Stop Bits	Selects the number of data bits and parity of serial transmission. "8 n" = 8 data bits with no parity bit and one stop bit "7 o" = 7 data bits with odd parity bit and one stop bit "7 E" = 7 data bits with even parity bit and one stop bit "7 n" = 7 data bits with no parity bit and two stop bits	**8 n √** 7 o 7 E 7 n
A2-3 Serial Port Mode	Selects the mode of the serial port: Refer to Serial Port Information for more information. "0" = Demand Full Duplex "1" = Continuous Full Duplex “2” = Auto Print “4” = Test and Measurement	**0** √ 1 2 4

CODE/NAME	DESCRIPTION	SELECTION LIST
A2-6 Output String	Selects fixed output string for serial port. Refer to Serial Port Information for details. "0" = String Format 1 (Condec Demand) "1" = String Format 2 (Condec Continuous) "2" = Text Print Ticket	0 1 **2** √
A2-9 Line Feeds	Key-in the number of line feeds (used for printouts). Pressing the **ZERO** key to scroll down one level begins the sequence.	Key-in 0 to 99 **000008** √
A2-13 Handshaking	Selects the function of the hardware handshaking. (NOTE: Receive pin is used for handshaking). "0" = Disabled "1" = Enabled	**0** √ 1

INDICATOR CALIBRATION

Calibration Overview

There are two ways to calibrate the indicator:

1. **Live calibration**: You will be calibrating an actual load sensor to the indicator using live test loads. You can have up to three span calibration points, denoted as C1 through C3. The value of each subsequent calibration point should be higher than the last, e.g., the C2 value should be greater than the C1 value, etc.
2. **mV/V calibration:** You simply will be entering data from your scale platform / load cell.

Live Calibration Overview

The live calibration procedure comprises two steps: **zero** calibration (F16) and **span** calibration (F17). We recommend doing **zero** calibration (F16) first.

Live Zero Calibration Instructions (F16)

1. While in the Setup mode, scroll to "**F 16**", and then scroll down once using the ZERO (down) key. The display will momentarily show "**C 0**" followed by a value. This value is the internal A/D count and can prove useful when trying to troubleshoot setup problems.
2. Assure a no-load condition on the scale platform and then press the ZERO key again to zero the display reading. Do NOT skip this step!
3. Press the NET/GROSS (set) key to save the zero-point value. The display will show "**SET**" and "**EndC0**" momentarily and then revert up to F16.

Live Span Calibration Instructions (F17)

1. While in Setup mode, scroll to "**F 17**", and then scroll down once using the ZERO (down) key. The indicator will briefly display '**C 1**' and then prompt you to enter the data for the span calibration point (C1).
2. Place the actual calibration load (weights) onto the scale platform.
3. Use the four directional keys to enter in the actual calibration weight value, e.g., 5000 lb. Increase the flashing digit by pressing the UNITS key. Decrease the flashing digit by pressing the ZERO key. Pressing the TARE key or the PRINT key will change the position of the flashing digit.
4. Press the NET/GROSS (set) key to save the value. The indicator briefly displays **'End C1'** and then moves to the next calibration point (C2).
5. Repeat steps 2 through 4 to enter data for the remainder of the calibration points. **You need not enter data for all three calibration points. To cease entering additional calibration points, simply enter zero for the new value, e.g., 0.0 lb.**
6. At the conclusion of C3 (or the last calibration point), the indicator will show "-donE" and reverts up to "F17".
7. Press the MENU/OFF key once to exit configuration mode and return to normal operating mode.

If the calibration was *not* successful, one of the following error messages will appear.

- "**Err0**" - The calibration test load or the keyed-in load is larger than the full capacity of the instrument. Change the calibration test load or check the input data.
- "**Err1**" - The calibration test load or the keyed-in load is smaller than 1% of the full capacity of the instrument. Change the calibration test load or check the input data.
- "**Err2**" – There is not enough signal from the force sensor to complete the calibration process. Most common causes include incorrect force sensor wiring, mechanical obstruction or a faulty (damaged) force sensor.

Take the indicated action to correct the problem and then perform a new calibration.

mV/V Span Calibration (F52)

This is an alternative calibration method and is less accurate yet does not require use of known weights. This method does not affect, change, or erase any of the digital scale system calibration values, so it can be used in a pinch as needed to get your scale system up and running.

1. While in Setup mode, scroll to "**F 52**", and then scroll down one more level using the ZERO (down) key to arrive at the "**F 52-1**" screen.
2. Populate the F52 sub-parameters per the Table following. Be sure to press the NET/GROSS key to save each new value.
3. When finished press the UNITS (up) key two times to reach the **"– F –"** screen and then press MENU/OFF key once to exit and return to normal operating mode.

The following example assumes that the scale system uses four **Transcell SBS-2.5K** load cells. All required information can be obtained from its datasheet, type label, and/or accompanying paper summary sheet(s).

The **Transcell SBS-2.5K** load cell has a rated capacity of 2500 pounds, and a rated output of 3 mV/V.

F52 menu	Value
F52-1	1 (Enable)
F52-2	1 (lb)
F52-3	2500
F52-4	4
F52-5	3.0000 (*)

mV/V Calibration Value Entry Table (example)

(*) for greater accuracy, use the average of the four rated outputs found on the paper summary sheets included with each load cell.

ADVANCED OPERATION

Weight Hold

This function captures an unstable load by freezing the weight reading on the display. Use the Motion Band (F5), Percentage Hold (F36) and Minimum Hold Weight (F37) settings to adjust this operation to your specific application. Use the A1-12-2 setting to set the color of the display when the weight has been locked onto the display.

To activate this mode, set F30 to “5” in the Setup Menu and then select a mode using F35:

AUTOMATIC HOLD (F35 = 1) –When the live load stabilizes within the value defined by the Motion Band (F5) setting, “HoLd”. Is briefly displayed and the reading automatically freezes on the screen If the live load exceeds the value defined by the Percentage Hold (F36) setting (e.g., 10%) then the indicator unlocks the previous reading and locks onto the new weight. This occurs during both increasing and decreasing load values.

MANUAL HOLD (F35 = 2) – Press the NET/GROSS key before attempting to capture any load. When the live load stabilizes within the value defined by the Motion Band (F5) setting, the indicator will freeze the reading on the screen. In addition, the “P” annunciator turns ON. If the live load exceeds the value defined by the Percentage Hold (F36) setting (e.g., 10%) then the sale unlocks the held reading and relocks onto the new weight. This occurs during increasing load values only. Press the NET/GROSS key again to disarm manual hold. Repeat this procedure as required.

Peak Hold

This function captures and holds the peak weight (force) value measured during a specific process. A common application is testing a part or assembly to determine its breaking point. To activate this mode, set F30 to “5” and F35 to “3” in the Setup Menu.

PEAK HOLD (F35 = 3) – Press the UNITS key to activate this mode. The “P” annunciator turns ON. The display updates during increasing load values only. Press the NET/GROSS key to toggle between positive peak and negative peak values. Press the UNITS key again to return to live weighing mode and clear the peak value. Repeat this procedure as required.

Piece Counting

This function calculates (“counts”) the number of items you have placed onto the scale platform. To ensure accuracy, the items you wish to count must be consistent in weight. To activate this mode, set F30 to “3” in the Setup Menu.

The indicator uses the sampling to determine the average piece weight (APW) of the items you wish to count. When sampling items, always count the items in your hand and place them onto the platform all at once. If the APW is too light or the weight of the sample size is too light, accuracy cannot be guaranteed. You will see an error message, but piece counting will still be allowed. This indicator does not retain the piece weight when powered off.

1. If the items you will be counting require a container, you must first tare the container off by pressing the TARE key.
2. Press the UNITS key a few times until “5 0” is indicated on the display. If the screen does not show “5 0”, press the ZERO key once. The indicator is prompting you to place five identical items on the platform.
3. Place the sample items onto the scale platform all at once and allow the weight indication to stabilize. The screen will change from “5 0” to “5 – “.
4. Press the NET/GROSS key to take the sample. The indicator now displays the number of pieces on the platform, and the “PCS” annunciator is lit.
5. To exit the piece count mode, press the UNITS key.
   NOTE: The APW will NOT remain in scale memory when you exit piece counting mode.

If error messages are encountered, please refer to the notes below and then take the indicated actions to correct the problem.

- If you wish to change the sample size (see Step 2), simply press the UNITS key a few times until the desired sample size appears. Available choices are 5, 10, 20, 50 and 100. If you continue to press the UNITS key, the indicator will resort back to weighing mode and you must start again from Step 2.

- If the sampling process was not successful, the indicator briefly displays “Lo” and automatically increments the sample size. Repeat Steps 3 and 4 with the new sample size. If the indicator continues to display “Lo” even after sampling 100 pieces, then the unit weight of the items you wish to count is too light for your scale to process accurately.

Accumulation (Totaling)

The function adds multiple weighments together to obtain a total weight. To activate this mode, set F30 to "1" in the Setup Menu.

1. Apply the load to the scale platform.
2. Press the PRINT key to add the current load to the weight accumulator. The display briefly shows the message "AddEd" and then automatically returns to the weighing mode. If a printer is installed, then a printout will be made.
3. Repeat Steps 1-2 for additional loads to be added
   Note: Weights cannot be recorded twice, i.e., the scale needs to return to Zero before another load can be added.
4. While at Zero, press the PRINT key two times to "Total Out":
   - If loads have been added, the display toggles between the total weight and the number of weighments for approx. 15 seconds. If no key is pressed during this period, then the subtotal stays in memory and the indicator returns to the weighing mode.
   - If the PRINT key is pressed during this period – and a printer is installed - then the display briefly shows "PrtClr---" and a Total printout will be made before the accumulator is reset to Zero.
   - If the NET/GROSS key is pressed during this period, then the display briefly shows "Clr---" and the accumulator is reset to Zero.

Net Weight

Gross weight refers to the total weight of a product and its packaging. Conversely, **net weight** refers to the weight of the product alone, discounting the weight of its container or packaging; and **tare weight** is the weight of the packaging alone.

1. If weighing an item in a container, place the empty container onto the scale's platter.
2. After allowing the weight indication to stabilize, press the TARE key. The display shows zero weight, and the NET annunciator is activated.
3. Place the object to be weighed on the scale's platter and allow the weight indication to stabilize. The reading shown is the net value of the applied load.
4. Toggle between the gross weight and the net weight by pressing the NET/GROSS key.
5. Press the TARE key again to clear the tare value and return to gross weighing mode.

Printer

If the weighing system has been equipped with a printer, then system data can be printed by pressing the PRINT key. Here is an example of a possible printout:

```
ID.NO.            123456
DATE             01/28/22
TIME             10:23 AM
GROSS             1067 lb
TARE                67 lb
NET               1000 lb
PCS               1000
```

Notes that some fields may not appear on your printout, depending upon your configuration settings, etc.

Static Checkweigher

This function helps ensure that the items being weighed are within an acceptable range. To activate this mode, set F30 to “6” in the Setup Menu.

NOTE: If you wish to drive a light tree or a set of buzzers/alarms, then an optional digital I/O board is required. Use the A1-25 menu to set the logic of the outputs.

TI-700K static checkweigher operation:

If the weight of the item is less than the Low (Min) value, then:
- Digital Output #1 is activated (if installed)
- Arrow points to SP1 on the keypad
- Display color is BLUE

If the weight of the item is greater than the High (Max) value, then:
- Digital Output #3 is activated (if installed)
- Arrow points to SP3 on the keypad
- Display color is RED
- Audible feedback is ON (if enabled via A1-23 menu)

If the weight of the item (net or gross) is within the acceptable range, then:
- Digital Output #2 is activated (if installed)
- Arrow points to SP2 on the keypad
- Display color is GREEN

Before use, you must set the Low and High (Min/Max) weight values. This can be done at any time from the front panel.

Setting the High/Low (Min/Max) Weight Values (Set Points)

1. Press the NET/GROSS key. The display briefly shows “Lo” followed by the current Low (Min) value with one digit blinking. The pointer to SP1 is lit.
2. Use the four directional keys to adjust the displayed value to the actual value. Increase the flashing digit by pressing the UNITS (up) key. Decrease the flashing digit by pressing the ZERO (down) key. Pressing the TARE (left) key or the PRINT (right) key will change the position of the flashing digit.
3. Press the NET/GROSS key to save the value. The screen displays “SET” and then “Hi” briefly, followed by the current High (High) value with one digit blinking. The pointer to SP3 is lit.
4. Use the four directional keys to adjust the displayed value to the actual value.
5. Press the NET/GROSS key to save the value. The screen displays “SET” briefly and the indicator returns to weighing mode. The new high/low weight values are now activated.

SERIAL (COM) PORT INFORMATION

SERIAL PORT MODES

DEMAND DUPLEX MODE

The Demand Duplex Mode provides a two-way serial transmission mode. In this mode, the output information is transmitted on demand; either by pressing the PRINT key or upon receiving a recognized command from a host.

NOTE: Ensure that your cabling has a crossover (null modem) and contains the proper handshaking lines.

CONTINUOUS DUPLEX MODE

The Continuous Duplex Mode provides a two-way serial transmission mode. In this mode, the output information is transmitted continuously making it a popular choice for remote displays and other remote devices requiring a constant data stream. The transmission automatically occurs at the end of each display update.

RECOGNIZED HOST COMMANDS

ASCII code (Hex)	Symbol	Action by the instrument
50	P	Transmit the displayed weight through the serial port.
5A	Z	Zero the scale
54	T	Tare the scale
47	G	Puts the scale into Gross display mode
4E	N	Puts the scale into Net display mode
43	C	Change the displayed unit of measure, e.g., lb or kg

Please note that host commands may be ignored if the scale is in motion, in positive overload or in negative overload.

AUTO PRINT MODE

The Auto Print Mode provides a one-time serial transmission once a non-zero, stable condition has been achieved.

Note: this option may not be available on all models

TEST AND MEASUREMENT MODE

The indicator will unconditionally respond to a PRINT command. Even if the scale is in motion, in positive overload, or below Gross zero.

OUTPUT STRINGS

Text Print Ticket

The Text Print Ticket is designed specifically for a serial line printer.

```
GROSS       1000.0  lb
```

Use the following parameter settings to customize further:

- A1-4: Print Header (MP-20 only)
- A1-7: ID Number
- A1-9: Line Feeds
- A1-13: Handshaking

Condec Demand String

Condec Demand String is designed for two-way communication.

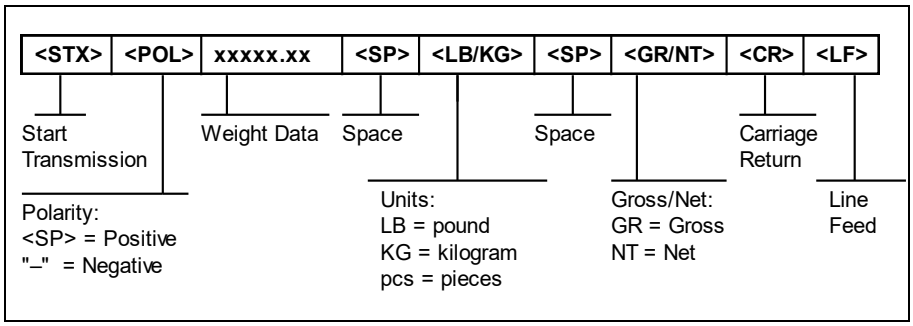

Condec Continuous String

[A6 = "0" and A3 = "C"]
Condec Continuous String is designed for one-way communication.

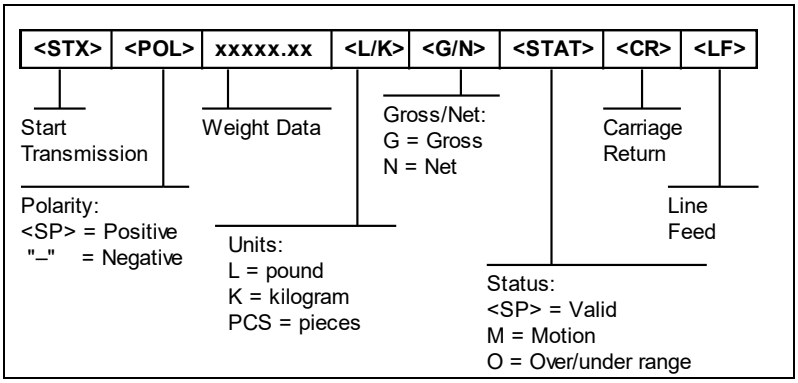

9L, 9P, 6LB/9LB, 6PB/9PB, 1P, 1PB and CUSTOM Strings

These strings are designed for use with the **TDP-225** serial printer. Use the A1-6 menu to select the format you want.

- 9L.BAS: 9 lines, formatted for 2” Labels, human readable only.
- 9P.BAS: 9 lines, formatted for Paper Roll, human readable only.
- 6LB/9LB.BAS: 6 or 9 lines, formatted for 2” Labels, human readable + barcode.
- 6PB/9PB.BAS: 6 or 9 lines, formatted for Paper Roll, human readable + barcode.
- 1P.BAS: 1 line, formatted for Paper Roll, human readable only.
- 1PB.BAS: 1 line, formatted for Paper Roll, human readable + barcode.
- CUSTOM.BAS: Custom print formatting is available, please contact your sales representative for more details.
- The fields to be printed – and the order in which they are printed - are defined by the indicator.
- Certain indicator models may not support all 6 or 9 fields. If there are only 4 fields to be printed, the printer prints all 6 or 9 lines. Any blank lines will be “printed” as blank.
- The format of the barcode is Code 128

Examples of information printed using various formats:

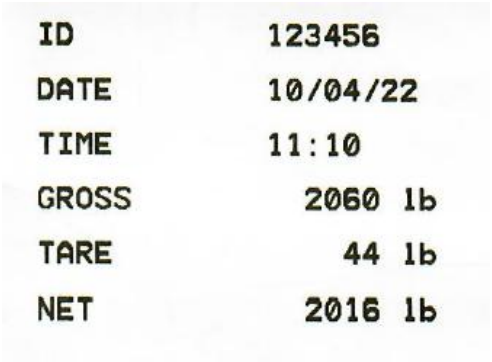

9P.BAS



6PB/9PB.BAS

ERROR MESSAGES

	The weighing capacity of the scale has been exceeded.
	The weight on the scale below Gross zero. Press the **ZERO** key.
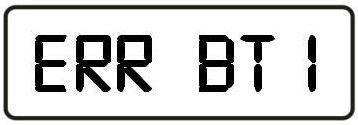	TI-500 RFTM #1 not found; ensure that it is powered ON or move it closer to the digital indicator. **WIRELESS SYSTEMS ONLY**
	**NOTE**: Dual systems only TI-500 RFTM #2 not found; ensure that it is powered ON or move it closer to the digital indicator. **WIRELESS SYSTEMS ONLY**
	TI-500 RFTM #1 batteries have been depleted and need to be replaced. **WIRELESS SYSTEMS ONLY**
	TI-500 RFTM #2 batteries have been depleted and need to be replaced. **WIRELESS SYSTEMS ONLY**
	Both TI-500 RFTM #1 *and* #2 batteries have been depleted and need to be replaced. **WIRELESS SYSTEMS ONLY**
	Battery in TI-700K indicator needs to be recharged or replaced.
	Battery in digital indicator needs to be recharged or replaced *and* TI-500 RFTM #1 batteries need to be replaced.
	Battery in digital indicator needs to be recharged or replaced *and* TI-500 RFTM #2 batteries need to be replaced.

	Battery in digital indicator needs to be recharged or replaced *and* both TI-500 RFTM batteries need to be replaced.
Err 24	Value for SP1 is greater than value for SP2.
Err 99	Parameter menus blocked. Place the calibration jumper back to its original position.
No-ad	Weighing platform not detected
r—---	Indicator is in Remote Display Mode
P -----	Indicator is in Peak Hold Mode
A-----	Indicator is in Accumulation Mode
C-----	Indicator is in Pieces Mode or Target Mode

SPECIFICATIONS

Digital Indicator Specifications – TI-700K
Enclosure: ABS and polycarbonate enclosure rated for IP69K
Display: 7-digit LCD w/LED backlight (reverse LCD also available)
A-to-D converter: AD-02
Resolution: Approximately 400,000 counts at 3mV/V input
Sampling Rate: Up to 1200 Hz, selectable
Excitation Voltage: +3.3 VDC, 8 x 350Ω load cells
Input Signal Range: ±3.125 mV/V
Serial Ports: Two (2) Full Duplex RS-232C, One USB
Operating Temperature: 14°F to 104°F (-10°C to 40°C)
Power: 100-240 VAC, 50-60 Hz, 0.8A (Output: 9.0 Vdc, 2A, 18.0W)

OPTIONAL Bluetooth Specifications (RFTM)
- 5.0. BLE or 2.0 (Legacy)
- Up to 1000m unobstructed
- (ISM) band at 2.4 to 2.485 GHz

Optional Digital Indicator Battery – TI-700K
- 7.4-volt 2.6 Ah internal Li-Ion rechargeable battery
- 85+ continuous hours of operation on full charge under typical operating conditions

OPTIONAL TI-500 RFTM Battery Holder
- Holds 1.5-volt x 4 “C” alkaline
- User replaceable
- 130+ continuous hours of operation under typical operating conditions

TROUBLESHOOTING

Issue / Recommendation

"Low Battery" icon blinks on the digital readout, then the indicator powers off.
Replace or recharge the batteries.

Weight reads out lower at one end of the weighing platform than the other end.

- Check for any type of mechanical binding or impingement of scale that is displaying the lower weight.
- Check underneath the scale for any obstructions or foreign debris.
- Make sure that the scale feet are not screwed in so far as to restrict downward movement of the scale.
- Adjust platform corners using a variable trimmer junction box (if supplied)

The indicator displays seven small zeros.

- The scale is overloaded. Remove weight from scale.
- Cut, damaged, loose, pinched cable between indicator and platform or within platform with multiple load cells (*cabled configuration only)
- Load cell damaged on platform.
- Internal fault with indicator; call Transcell Tech Support

Scale turns off on its own.
The indicator has a power conservation feature, set to automatically power off the scale after 30 minutes of non-use. If your needs require a different setting, call Transcell Tech Support or installer.

Display is erratic.

- The battery may be fully depleted. If so, this condition can cause erratic displays. Power off the indicator and replace or recharge the battery.
- Check underneath the scale for any obstructions or foreign debris.

Transcell Tech Support: (847) 419-9180

Limited 12-month Warranty

This product is warranted by Transcell Technology against manufacturing defects in material and workmanship under normal use for twelve (12) months from the date of purchase. For complete warranty details and service information, please contact us at the address below.

Transcell Technology, Inc.
975 Deerfield Parkway
Buffalo Grove, IL 60089
Tel (847) 419-9180
Fax (847) 419-1515
Web: www.transcell.com